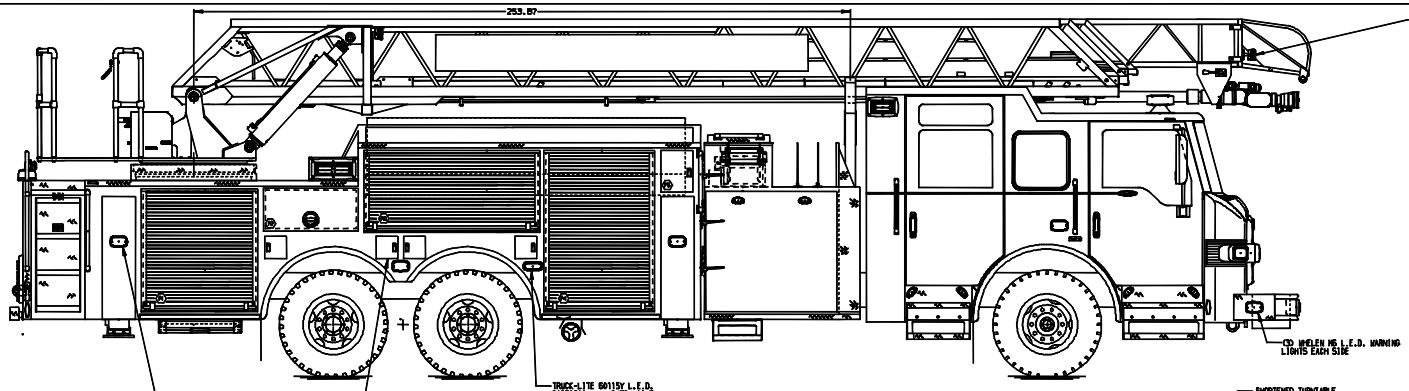

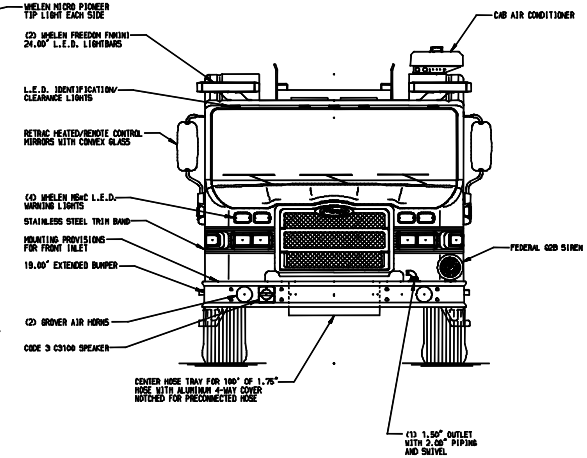

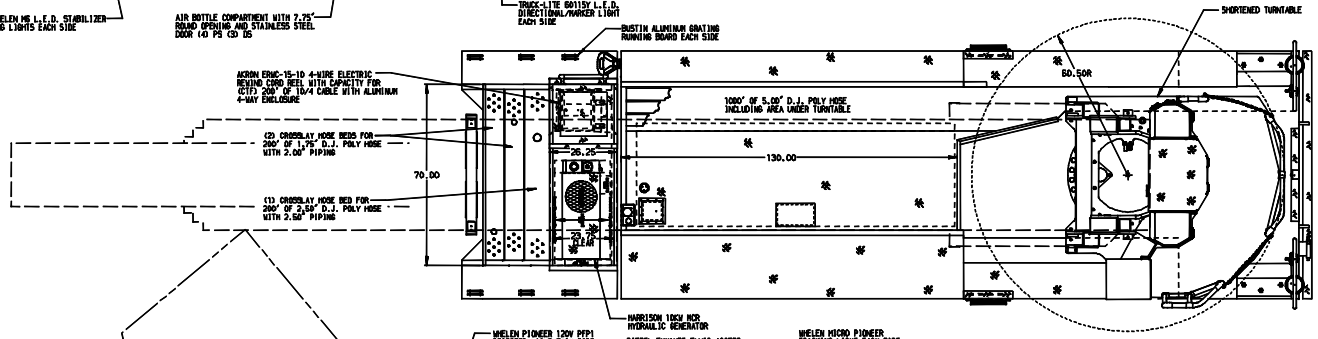

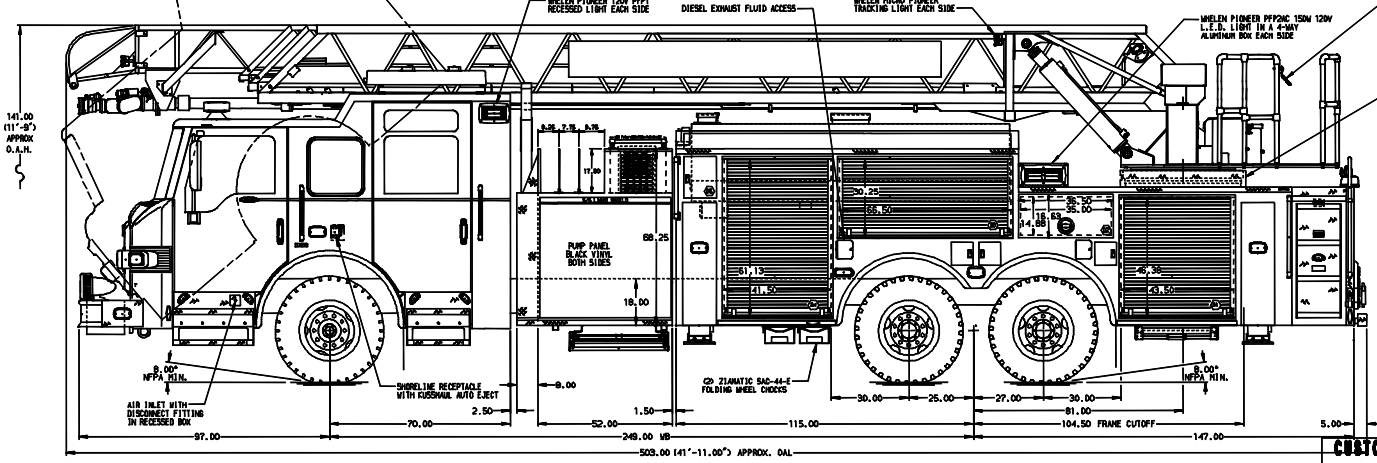

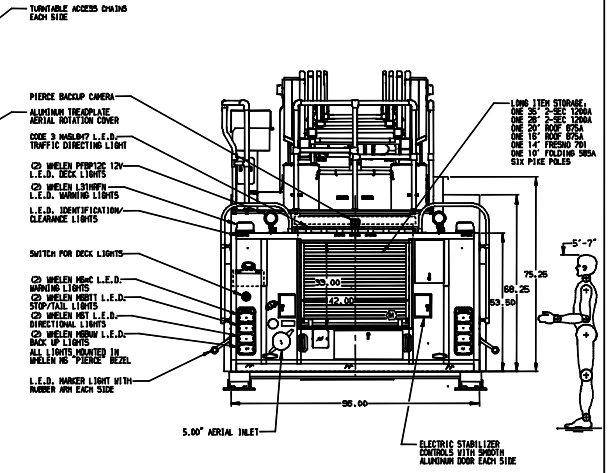

ALUMINUM BODY

SIDE ROLL & FRONTAL IMPACT PROTECTION

NOTE

DIMENSIONS SHOWN ARE APPROXIMATE AND ARE SUBJECT TO MINOR DEVIATIONS AS MAY OCCUR OR BE NECESSARY IN CONSTRUCTION.
MINOR DETAILS NOT SHOWN.

1. MOUNTING BASE FOR ANTENNA LOCATED PER SHOP ORDER
2. BATTERY CHARGER LOCATED BEHIND DRIVER'S SEAT
3. PERIMETER SCENE LIGHTS LOCATED PER SHOP ORDER
4. STAINLESS STEEL GUARD/DRIP PAN ON COMPARTMENT-D1,D3,D4,P1,P3,P4,R1
5. PIERCE L.E.D. COMPARTMENT LIGHTS IN COMPARTMENT-D1 D2,D3,D4,P1,P2,P3,P4
6. 500 LB. FULL WIDTH/DEPTH ADJUSTABLE PAINTED SHELVES IN COMPARTMENT ONE IN D1,P1,P3;TWO IN D4,P4
7. 500 LB. FLOOR MOUNTED SLIDE-OUT TRAYS WITH 2" SIDES IN COMPARTMENT-D1,D4,P1,P4
8. 215 LB. ADJUSTABLE TILT/SLIDE-OUT TRAY IN COMPARTMENT-D3
9. PAINTED SHELF TRACKS LOCATED PER SHOP ORDER
10. CIRCUIT BREAKER PANEL IN COMPARTMENT-D5
11. EBERHARD FOLDING STEPS MOUNTED ON AERIAL DEVICE PER SHOP ORDER
12. TECHNO L.E.D. RUNG STYLE LIGHTING ON AERIAL LADDER SECTIONS
13. FIRE RESEARCH 2-WAY RADIO INTERCOM SYSTEM MOUNTED PER SHOP ORDER
14. AERIAL PEDESTAL RAISED 3.00"
15. 21.00" AERIAL LIMITED RETRACTION
16. STABILIZERS MODIFIED FOR 18.00" GROUND PENETRATION
17. LIFTING EYE RESCUE ATTACHMENT AT AERIAL TIP
18. ALUMINUM TREADPLATE EXTERIOR REAR WALL OF CAB

CUSTOMER APPROVAL

APPROVED BY: _____

DATE:

REV	DATE	BY	CH
2	22AUG13	BST	COR
1	24JUL13	BST	BZI

CHASSIS DATA	
MAKE	PIERCE
MODEL	VELOCITY

Pierce MANUFACTURING INC.

TITLE	105' HSL AERIAL LADDER AND BODY ASSEMBLY 520 GALLON NOTCHED TANK-500 GAL. WATER/20 GAL. FOAM
FOR	PIERCE MANUFACTURING APPLETON, WI
DWG NO.	27003AD

JOB NO.	27003
SCALE	1:24
DATE	
DRAWN BY	BST 16JUL13
CHECKED BY	GRM 16JUL13
SHEET SIZE	D
SHEET NO.	1 of 1

View File Created 29-AUG-2013 10:21:11