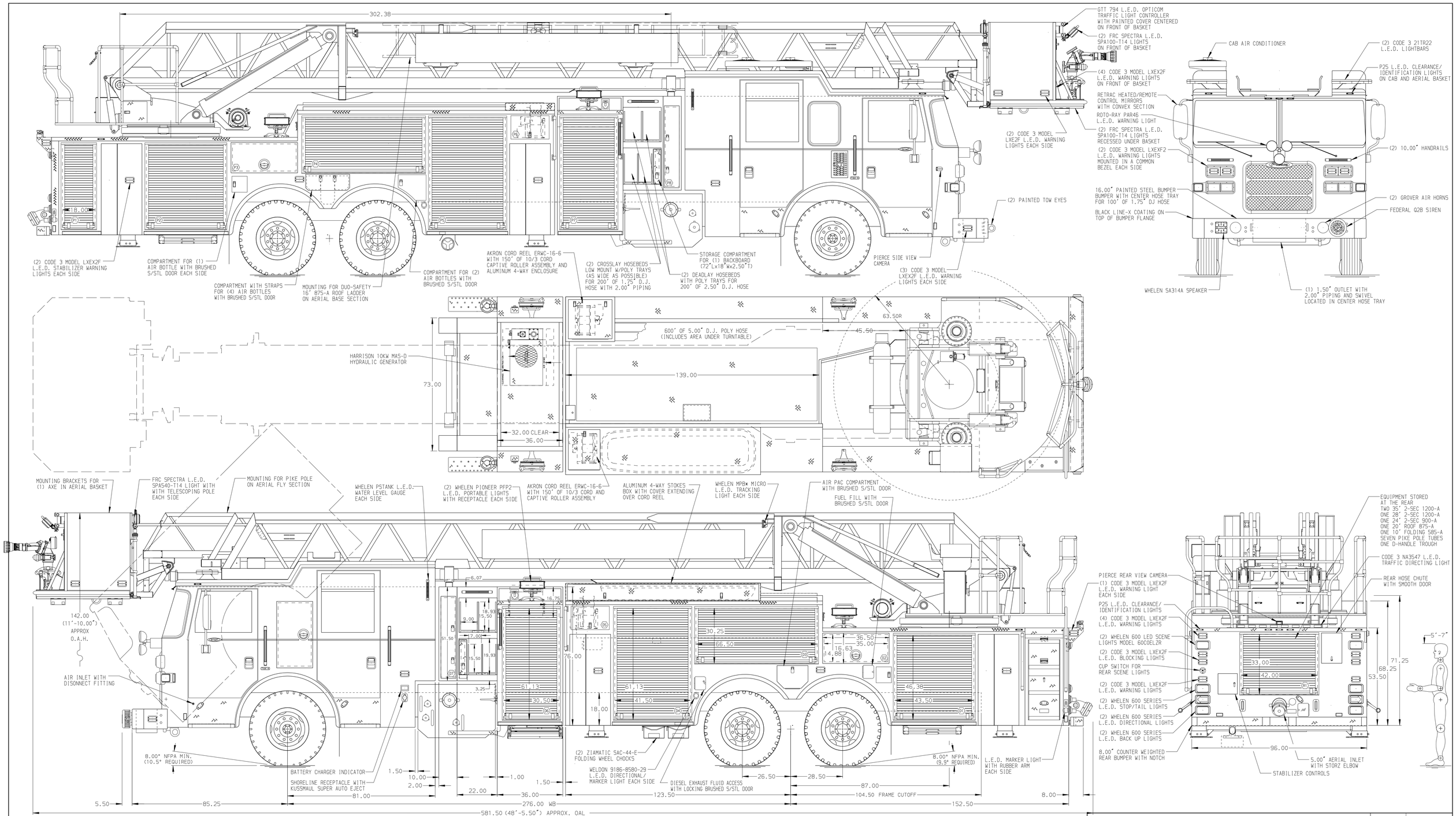

ALUMINUM BODY

MAXIMUM O.A.H. 143.00"

SIDE ROLL & FRONTAL IMPACT PROTECTION

NOTE

DIMENSIONS SHOWN ARE APPROXIMATE AND ARE SUBJECT TO MINOR DEVIATIONS AS MAY OCCUR OR BE NECESSARY IN CONSTRUCTION.
MINOR DETAILS NOT SHOWN.

1. VOGEL LUBE SYSTEM PUMP LOCATED PER SHOP ORDER
2. ONE TRIDENT FOLDING STEP WITH LUMINESCENT COATING ON FRONT BULKHEAD EACH SIDE
3. MOUNTING BASE FOR ANTENNA LOCATED PER SHOP ORDER
4. AMDOR LUMABAR PERIMETER SCENE LIGHTS LOCATED PER SHOP ORDER
5. PIERCE L.E.D. COMPARTMENT DUAL LIGHT STRIPS LOCATED PER SHOP ORDER
6. ONE FULL WIDTH/DEPTH PAINTED ADJUSTABLE SHELF IN COMPARTMENTS D1,P1,P2,P4;TWO IN P5
7. ONE FLOOR MOUNTED SLIDE-OUT TRAY IN COMPARTMENTS D1,P2,P5
8. TWO ALUMINUM SLIDE-OUT TOOLBOARDS WITH PEGBOARD PATTERN IN COMPARTMENT P7
9. ONE ADJUSTABLE TILTING SLIDE-OUT TRAY IN COMPARTMENTS D3,D4
10. DRIP PAN GUARD FOR EACH BODY COMPARTMENT ROLL-UP DOOR
11. SHELF TRACKS LOCATED IN COMPARTMENTS PER SHOP ORDER
12. ONE 120V 6-PLACE SHORELINE RECEPTACLE LOCATED IN CAB
13. BATTERY CHARGER LOCATED IN COMPARTMENT D4
14. C-TECH 4 DRAWER COMPARTMENT ASSEMBLY IN COMPARTMENT D4
15. 120V POWER TO AERIAL TIP
16. BREATHING AIR TO AERIAL TIP
17. 3-in-1 LYFECOMBO BRACKETS AT AERIAL BASKET
18. CIRCUIT BREAKER PANEL IN COMPARTMENT D4
19. AIR OUTLET WITH SHUT-OFF VALVE LOCATED IN COMPARTMENT D6
20. L.E.D. LIGHTING ON AERIAL LADDER SECTIONS
21. 12.00" LIMITED RETRACTION ON AERIAL FLY SECTION

REV	DATE	BY	CH
1	11MAY15	SHU	COR
2	31MAR15	SHU	COR
3	16FEB15	SHU	GRM

CHASSIS DATA
MAKE: PIERCE
MODEL: AXT8110

Pierce MANUFACTURING INC.

TITLE: 100 AERIAL PLATFORM & BODY ASSEMBLY
480 GALLON WATER TANK

FOR: CITY OF WHEAT RIDGE
WHEATRIDGE, COLORADO

DWG NO. 28594AD

JOB NO.	28594
SCALE 1:24	DATE
DRAWN BY SHU	06FEB15
CHECKED BY GRM	09JAN15
SHEET SIZE D	SHEET NO. 1 OF 1

View File Created 13-MAY-2015 07:20:16