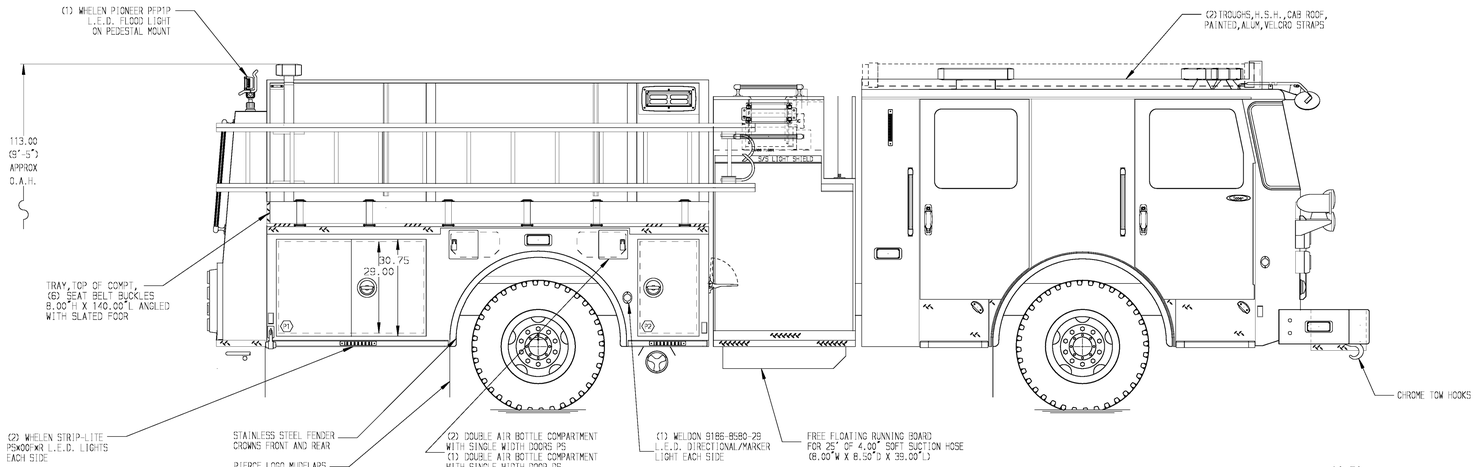

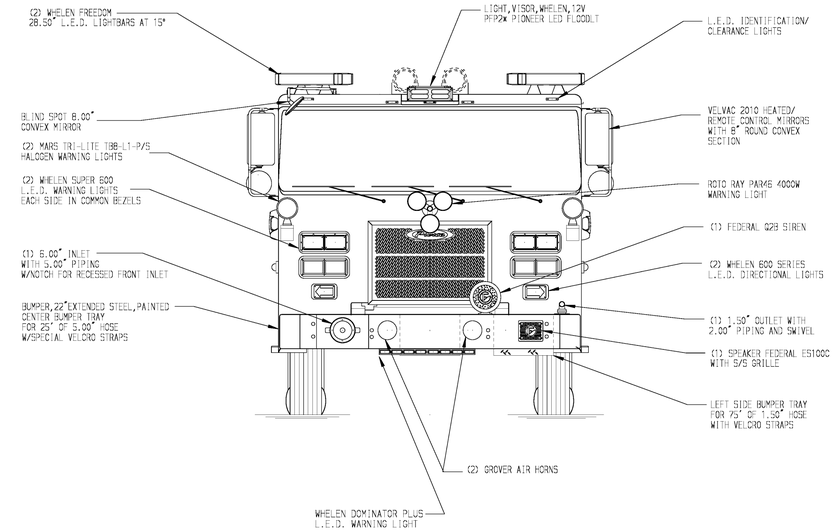

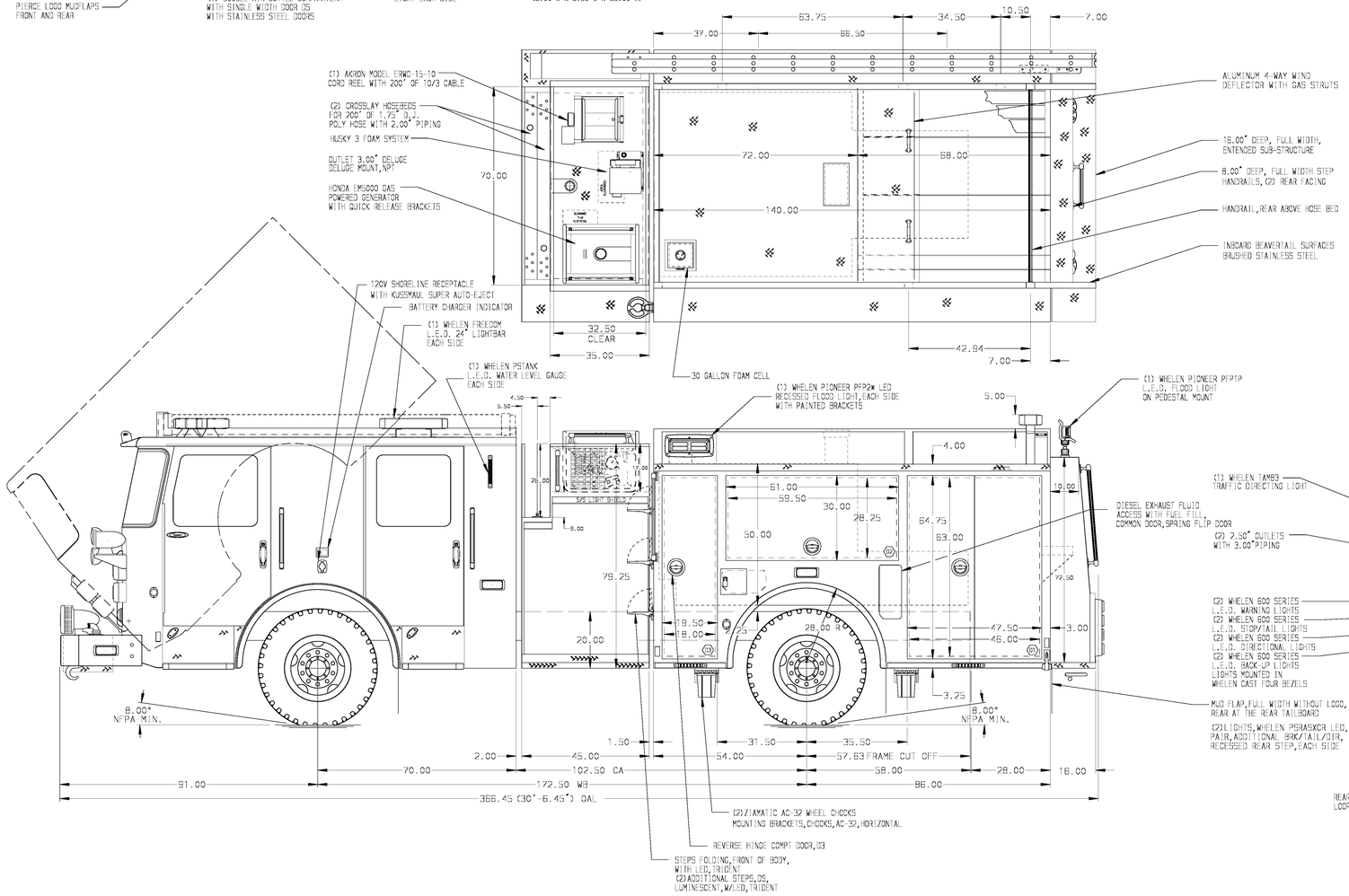

HOSEBED CAPACITIES

1. 300' OF 1.75" D.J. POLY HOSE
2. 300' OF 2.00" D.J. POLY HOSE
3. 1500' OF 4.00" D.J. POLY HOSE
4. 600' OF 3.00" D.J. POLY HOSE

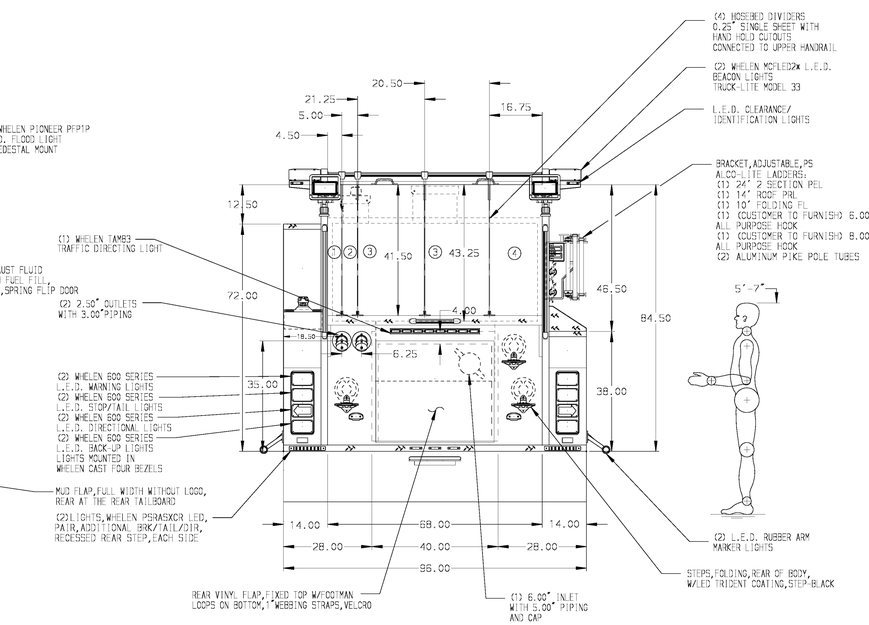

ALUMINUM BODY

NOTE

DIMENSIONS SHOWN ARE APPROXIMATE AND ARE SUBJECT TO MINOR DEVIATIONS AS MAY OCCUR OR BE NECESSARY IN CONSTRUCTION.
MINOR DETAILS NOT SHOWN.

REV	DATE	BY	CH
7	05OCT15	JAF	RWI
6	24JUL15	JLA	BRX
5	21JUL15	JLA	BRX
4	18MAY15	JAF	BRX
3	23MAR15	AMI	WKL

CHASSIS DATA — MAKE: PIERCE — MODEL: SABER-FR

Pierce MANUFACTURING INC.

TITLE: 2000-D-750P W/30G FOAM, 140", FULL HGT D.S., LOW P.S (2) X-LAYS, DELUGE, GENERATOR, CORD REEL

FOR: WILLIAMSPORT VOLUNTEER FIRE & EMS COMPANY, WILLIAMSPORT, MD

DWG NO.: 28467AD

JOB NO.	28467
SCALE	1:24
DATE	
DRAWN BY	TES
07JAN15	
CHECKED BY	WKL
05MAR15	
SHEET SIZE	D
SHEET NO.	1 OF 1

View File Created 07-OCT-2015 09:34:17