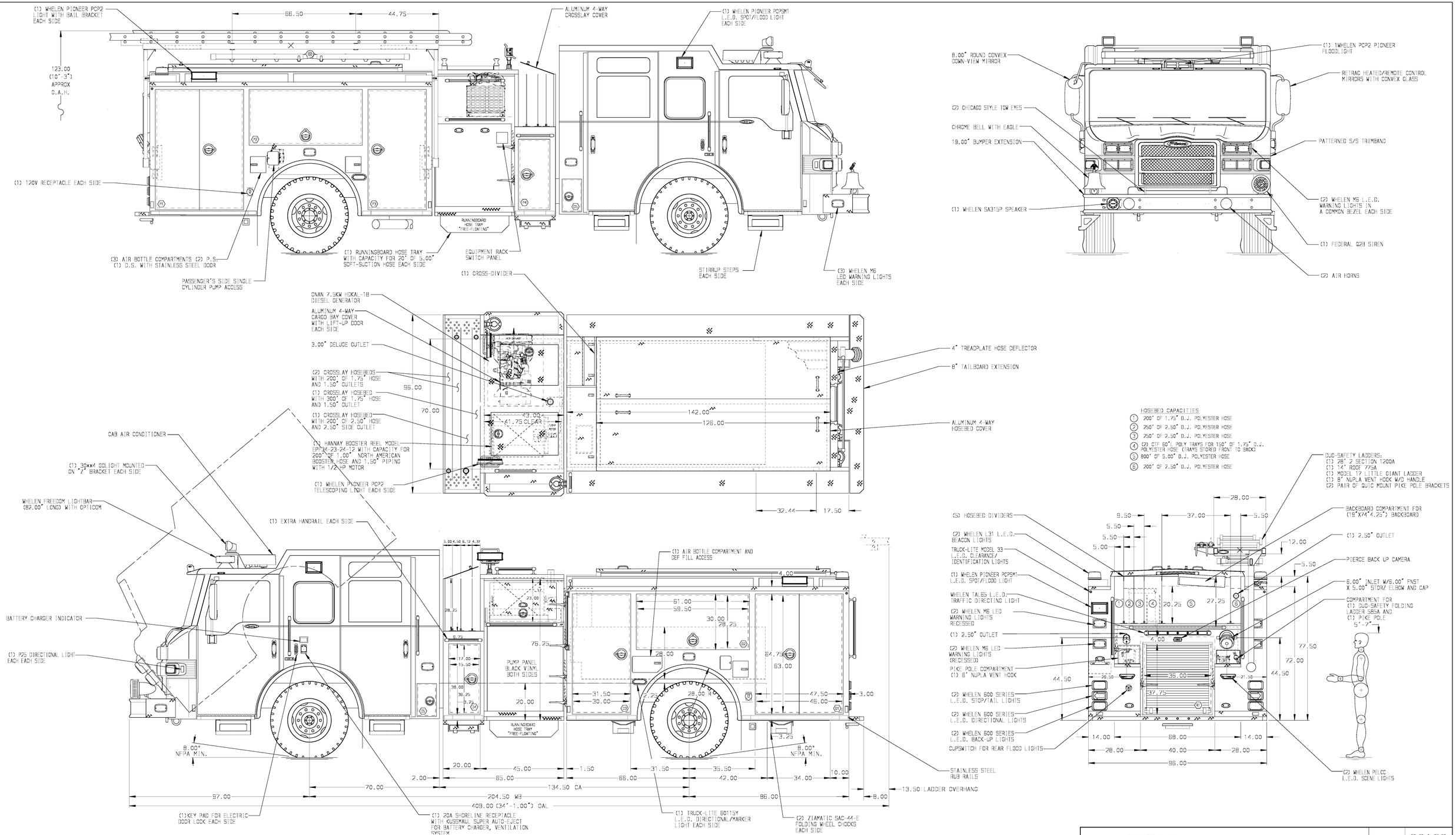

ALUMINUM BODY

MAXIMUM O.A.H. 126.00"

SIDE ROLL & FRONTAL IMPACT PROTECTION

NOTE

DIMENSIONS SHOWN ARE APPROXIMATE AND ARE SUBJECT TO MINOR DEVIATIONS AS MAY OCCUR OR BE NECESSARY IN CONSTRUCTION.
MINOR DETAILS NOT SHOWN.

1. S/STL SCUFFPLATE ON EACH CAB DOOR JAMB
2. MOUNTING BASE FOR ANTENNA LOCATED PER SHOP ORDER
3. KUSSMAUL BATTERY CHARGER/AIR COMPRESSOR IN SEAT BOX
4. BATTERY CHARGE INDICATOR MOUNTED ON DRIVER SIDE CREW CAB SEAT RISER
5. PERIMETER SCENE LIGHTS LOCATED PER SHOP ORDER
6. ONE 12V L.E.D. LIGHT STRIP LOCATED ON EACH SIDE IN THE HOSEBED
7. AMDOR LUMABAR H20 AY-S500-040 40.00" L.E.D. HOSE BED LIGHTS
8. PULL STRAP ON DOOR IN D2 AND P2
9. S/STL SCUFFPLATE ON BOTTOM EDGE OF DOOR FRAMING OF ALL COMPARTMENTS EXCEPT R1
10. S/STL SCUFFPLATE INTERIOR OF DOOR IN EACH COMPARTMENT DOOR
11. S/STL PROTECTIVE GUARD FOR ROLL-UP DOOR IN R1
12. AMDOR L.E.D. COMPARTMENT LIGHT STRIPS LOCATED PER SHOP ORDER
13. PAINTED SHELF TRACKS LOCATED IN COMPARTMENT 2
14. FULL WIDTH/DEPTH PAINTED ADJUSTABLE SHELF (3) IN P3 (2) IN D1, D3,P1 (1) IN D2,P2
15. VIN-A-GRIP MATTING ON ALL FLOOR, SHELVES AND TRAYS
16. PARTITION BETWEEN COMPARTMENTS D1/R1 AND P1/R1
17. ONE VERTICAL PARTITION FOR D3 SHIP LOOSE
18. PAINTED FLOOR MOUNTED STORAGE RACK FOR EXTINGUISHERS IN P4
19. ALL FOLDING STEPS TO BE TRIDENT WITH INTEGRATED L.E.D. LIGHT UNLESS SPECIFIED
20. ONE DUPLEX RECEPTACLE IN R1,D3
21. ONE ADJUSTABLE FULL WIDTH/DEPTH SLIDE-OUT TRAY IN D1
22. TWO LOW SLIDEOUT ADJUSTABLE TRAYS IN R1
23. FLOOR MOUNTED SLIDE OUT W/ SIDE SLIDES TRAY IN R1
24. AIR BOTTLE STORAGE IN P3
25. COMPARTENT VENTILATION SYSTEM WITH TIMER
26. EQUIPMENT MOUNTING TRACKS IN EACH ENGINEERS COMPARTMENT
27. RESPOND READY 4-DRAWER STORAGE IN D4
28. AIR INLET W/ DISCONNECT IN D.S. STEP WELL
29. AIR OUTLET IN D.S. STEP WELL

REV	DATE	BY	CH
7	28OCT15	LST	JJR
6	28SEP15	LST	JJR
5	30JUL15	LST	SMA

CHASSIS DATA	
MAKE	PIERCE
MODEL	VEL7010
DWG NO.	29162AD

Pierce MANUFACTURING INC.

TITLE	1500-D-500 GAL POLY, 152" BODY, FULL HEIGHT FRONT & REAR BOTH SIDES, ENG COMPT, HYDRAULIC LADDER RACK
FOR	THURSTON CO. FIRE DEPARTMENT #3, LACEY LACEY, WASHINGTON

JOB NO.	29162
SCALE	1:24
DATE	09JUL15
DRAWN BY	LST
CHECKED BY	SMA
SHEET SIZE	D
SHEET NO.	1 OF 1

View File Created 20-NOV-2015 13:59:24