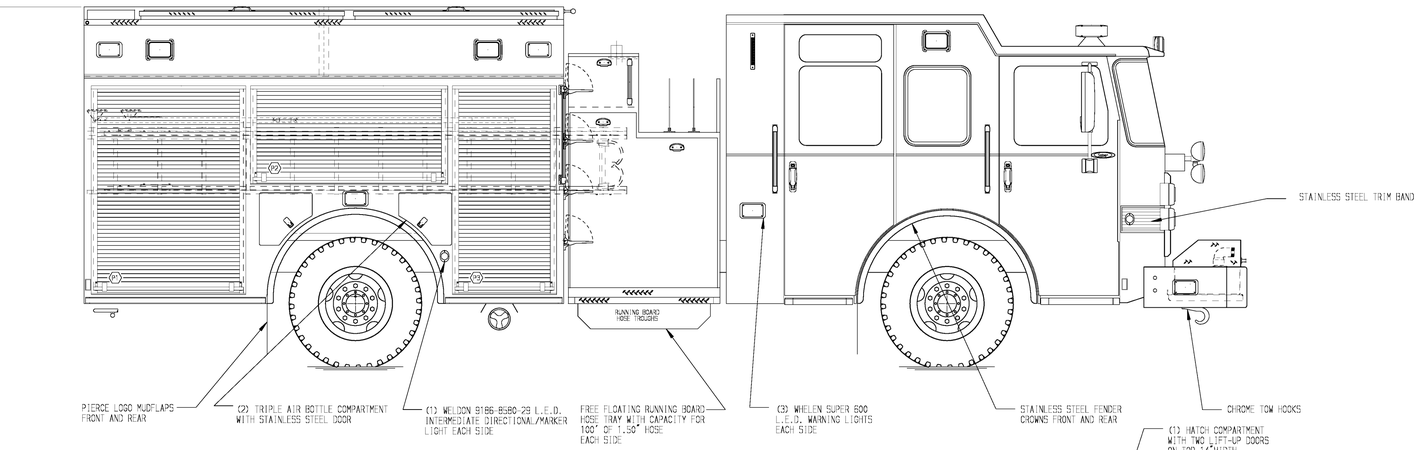

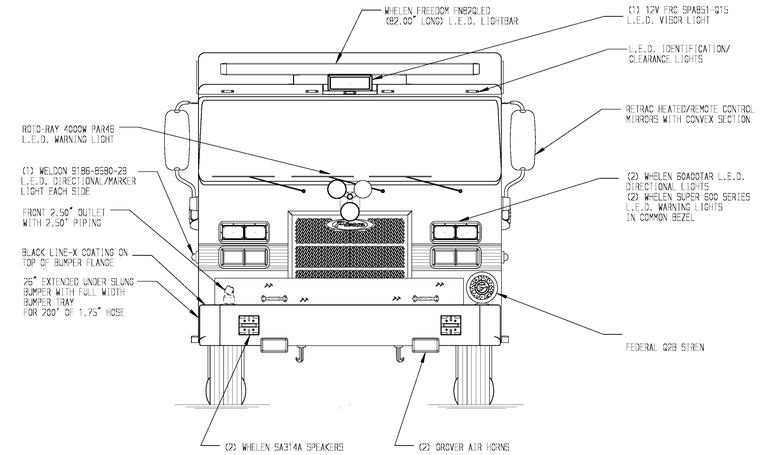

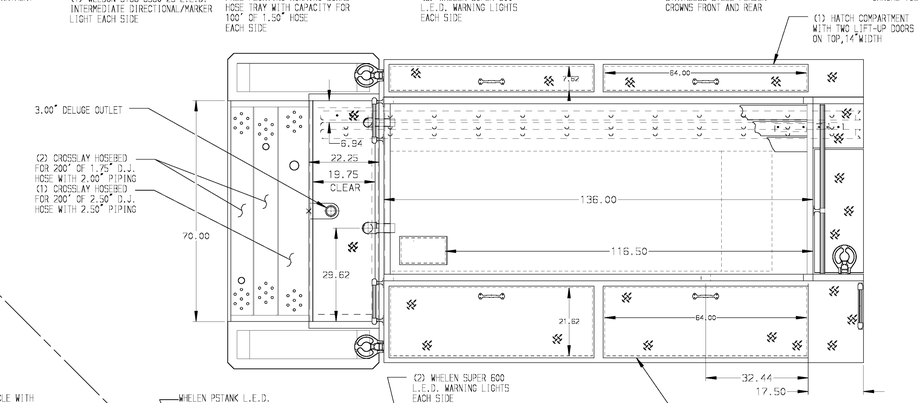

HOSEBED CAPACITIES

1. 300' OF 2.50" D.J. POLY HOSE
2. 300' OF 2.50" D.J. POLY HOSE
3. 1200' OF 4.00" D.J. POLY HOSE
4. 300' OF 1.75" D.J. POLY HOSE

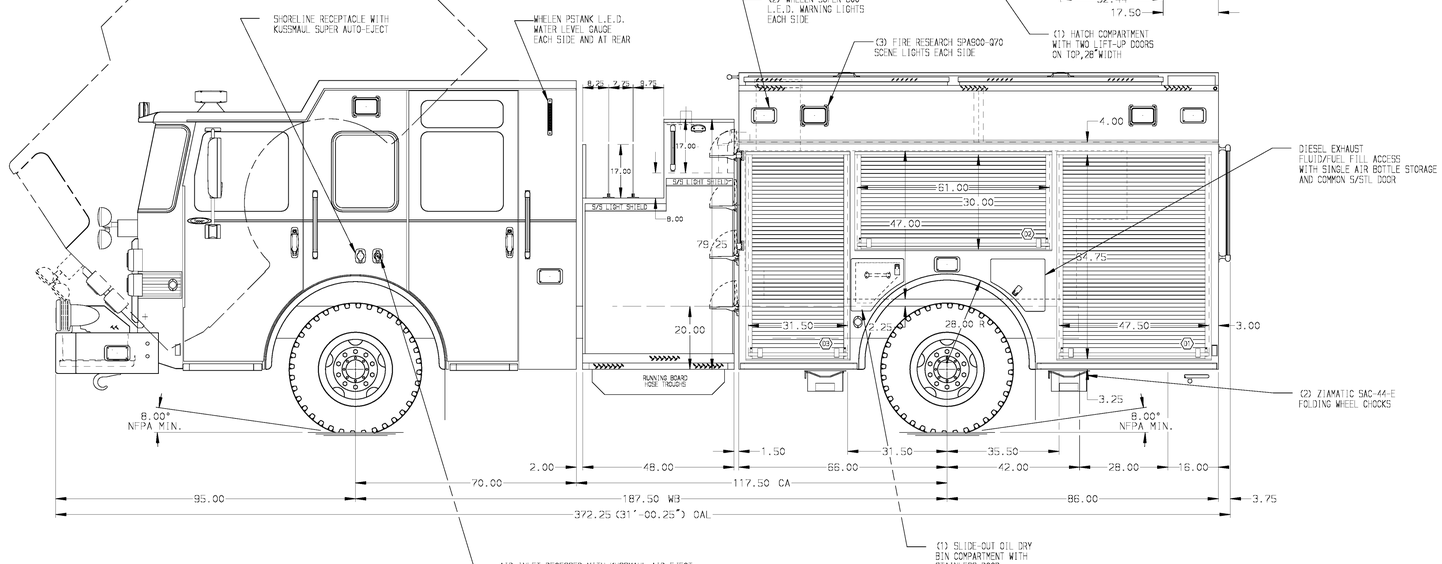

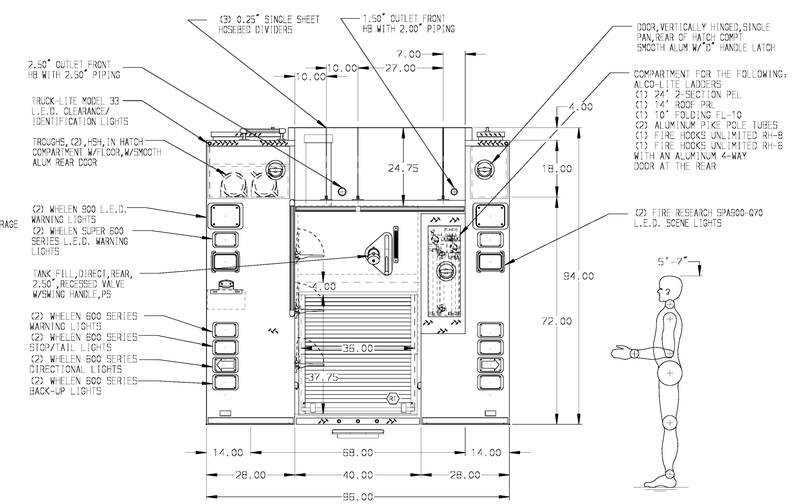

ALUMINUM BODY

NOTE
DIMENSIONS SHOWN ARE APPROXIMATE AND ARE SUBJECT TO MINOR DEVIATIONS AS MAY OCCUR OR BE NECESSARY IN CONSTRUCTION.
MINOR DETAILS NOT SHOWN.

REV	DATE	BY	CH
4	04FEB16	JAF	GSC
3	17OCT15	JLA	GSC
2	18SEP15	JLA	GSC
1	27JUL15	TES	VMO

CHASSIS DATA
MAKE: PIERCE
MODEL: SABER FR

Pierce MANUFACTURING INC.

TITLE: 1500-D-750P 152" BODY FH&FD FRONT & REAR DS, FDLER PS LADDERS NEXT TO TANK, DELUGE, TWO HOSEBED OUTLETS

FOR: MONTICELLO VOLUNTEER FIRE DEPARTMENT
STATESVILLE, NORTH CAROLINA

DWG NO.: 29072AD

JOB NO.	29072
SCALE	1:24
DATE	
DRAWN BY	TES 29JUN15
CHECKED BY	KBO 30JUN15
SHEET SIZE	D
SHEET NO.	1 OF 1

View File Created 17-FEB-2016 07:13:28