PX-16
Industrial LED Light

PX16 is the latest in our high performance LED work lights for heavy industry, equipment and machinery. Using 4 Cree XHP70 diodes the PX16 is unrivaled in lumen output and efficiency. Producing ~9000 effective lumen, the PX16 is manufactured with a state-of-the-art driver, active thermal management and IP68 ingress protection for harsh and wet environments.

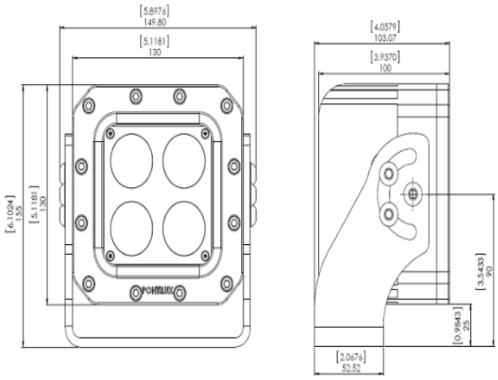

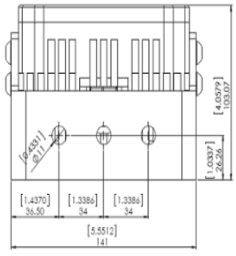

Light Source	4 Cree XHP70 Diodes
	LED Options:
	Cool White 5000 CCT* CRI >75 Warm White 2700 CCT* CRI >80 >50,000 hours average life time * approximate values
Construction	Extruded Aluminum
Mounting Bracket	Stainless steel mounting bracket and hardware • 5.5 mm thickness • Optional anti-vibration bracket available
LED Driver	9 - 48VDC State of the Art Driver

Parameter	Min	Typical	Max	Unit
Voltage	9	12/24	48	V
Power		70		W
Mean Lumens		~9000		lm

Protection	• Built-in active thermal management • EMI filtration • Reverse voltage protection • Under-voltage shutdown • Transient voltage suppression • IP 68
Optics	Lexan / 20° Smooth Spot, 40° Medium Flood, 70° Flood
Power Connector	12" 2 conductor cable with 2 Pin Deutsch power connector *Marine cable available
Ambient Operating Temperature	-40°C to +70°C
IES File	Call PTLX Global at 1-800-397-7859
Weight / Dimensions	6.8 lbs (3.1kg) (6.1" X 5.9" X 4.05") (155mm X150mm X 103mm)
Ordering Information	Please see ordering chart or contact us for details. Slip fitter and custom brackets available. Also available in 100-277VAC option with ballast.

C US

8750, 1598, CSA 22.2 No.250.0-08