helo
COMMERCIAL

DRAWING #

Dsnr 3 Sided

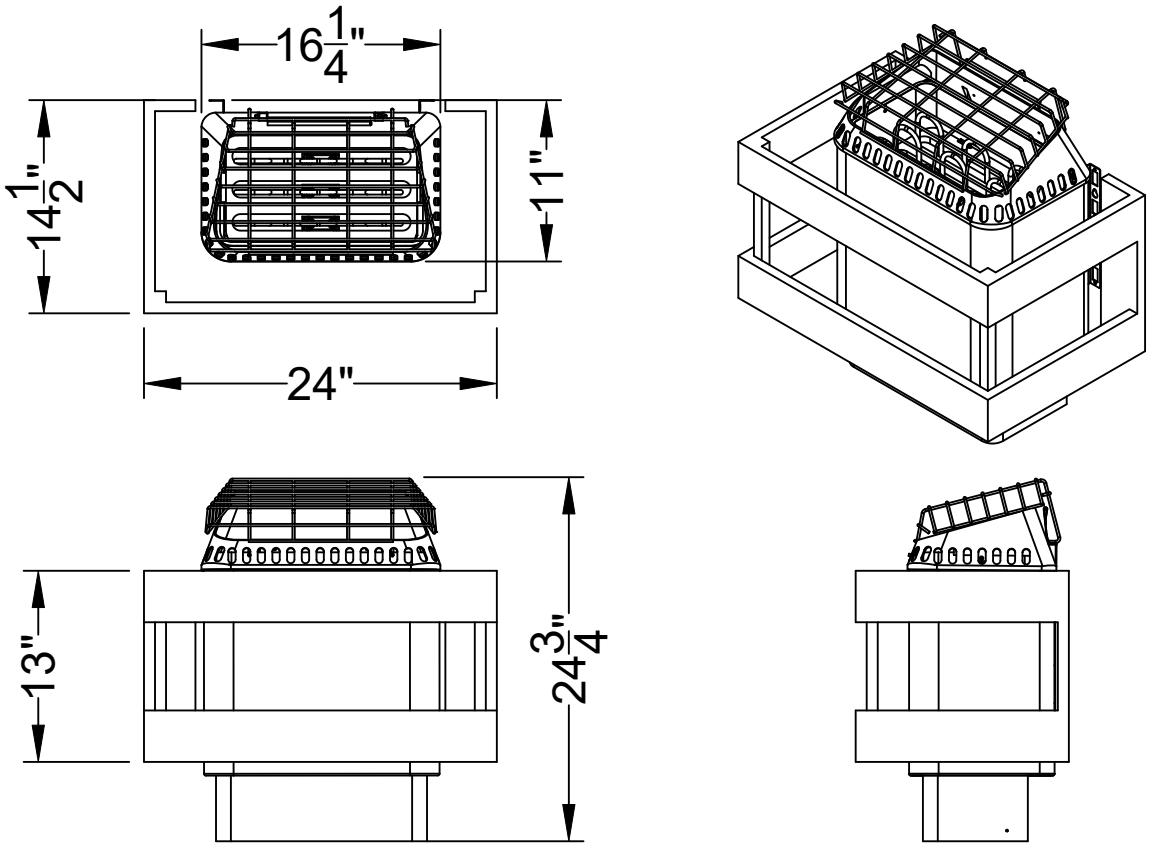

DATE: 2020