helo
COMMERCIAL

DRAWING #

Laava 2 Sided

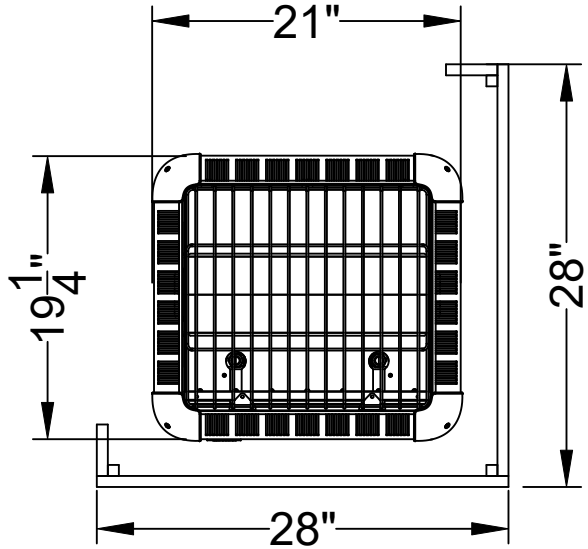

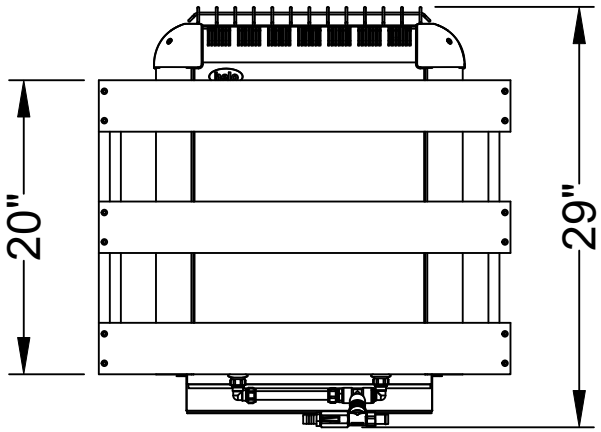

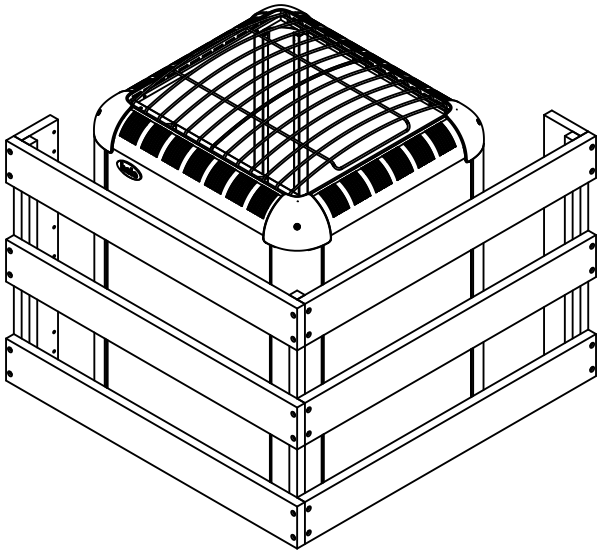

DATE: 2020