helo
COMMERCIAL

DRAWING #

Laava 3 Sided

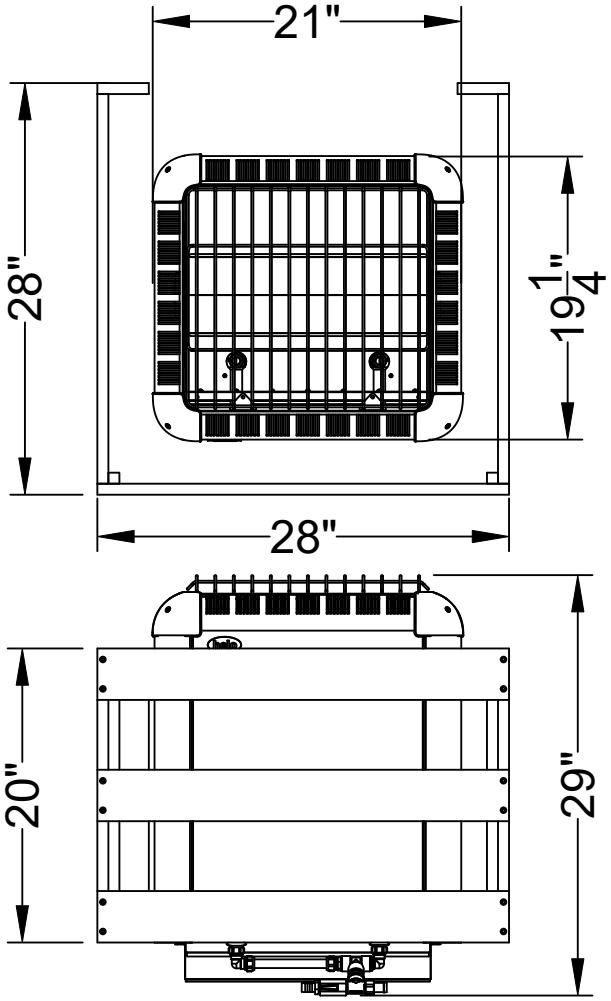

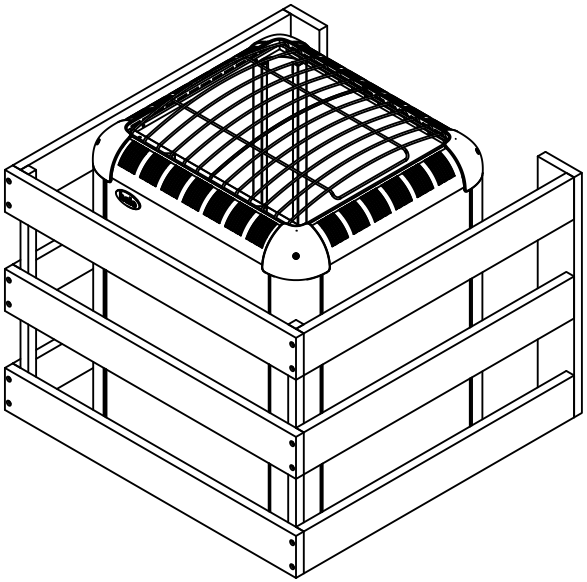

DATE: 2020