amerec A210XLK-2 Chromatherapy Light Kit Installation and Operating Instructions

The Model A210ZLK-2 Chromatherapy Light Kit is designed to be used with the AX model steam generators. The LED lights should be mounted in the ceiling of the room and the transformer should be in a convenient dry location. The AX's bath control switch is used to change the LED light colors and patterns.

DIAGRAM 1

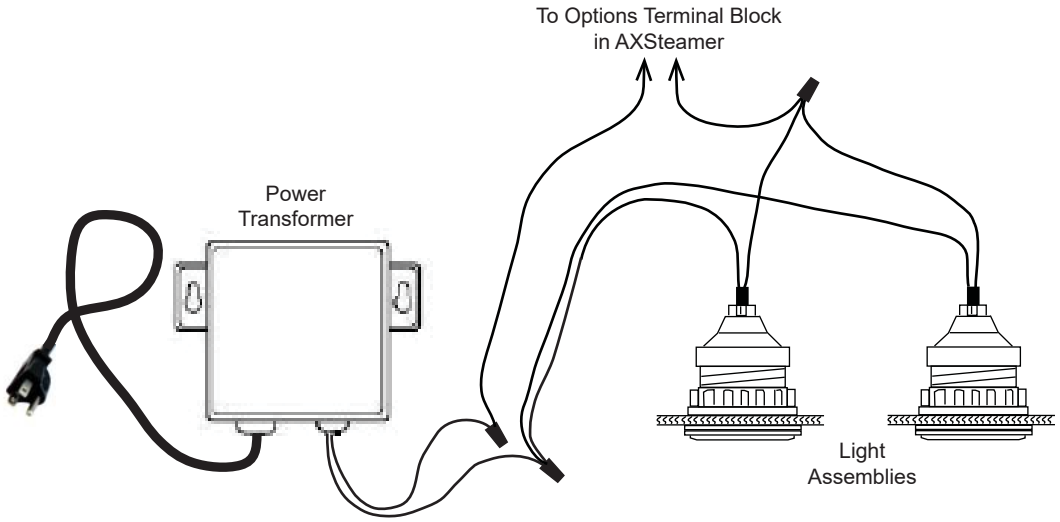

General Installation

Determine locations suitable for mounting the Chromatherapy system's components:

- The steam bath control's light switch is used to turn the lights on during the steam bath and to momentarily turn the LED lights off then on again in order to change their colors and patterns.
- The LED light assemblies are to be mounted in the ceiling of the steam room. The LED's 8' power wires will connect to the white wire from the transformer and to a wire from the steamer's option terminal block. The Transformer's black wire will be connected to the matching location at the steamer's option terminal block. **Note**: *one option terminal block location is dedicated to controlling a steam room light. Three options are available on the A6 control to allow connecting other devices, such as one option for color chroma lights and a second option for white lights.*
- The 120VAC to 12VAC power transformer should be connected to a branch circuit's standard wall outlet. A 6' power cord with a standard 15A 3-prong plug is attached to the transformer input and 8' of low voltage wires are attached to the transformer's 12V output. The low voltage wires are to be connected to the to the LEDs with one lead routed through a relay contact through the steamer's options terminal block.
- The controller should be mounted on a wall in an easily accessible location convenient to the other components.

Determine how the lights will be used:

- The lights turn on automatically when the steam bath is on.

  Connect the wires to the LIGHT connection on the options terminal block in the steamer. The lights will stay lit for 10 minutes after the bath turns off. The lights may be turned on or off manually at any time using the A3 or A6 control.

- The lights turn on only when the user turns them on.

  Connect the wires to one pair of the AUX connections on the options terminal block in the steamer. On the A6 control, set the chosen AUX option to on/off and choose a name, such as Chroma Lights. To turn the lights on, go to the temperature menu (select ± on the tool bar at the bottom of the screen. The lights will stay lit until turned off again or until the end of the next bath period.

DIAGRAM 2

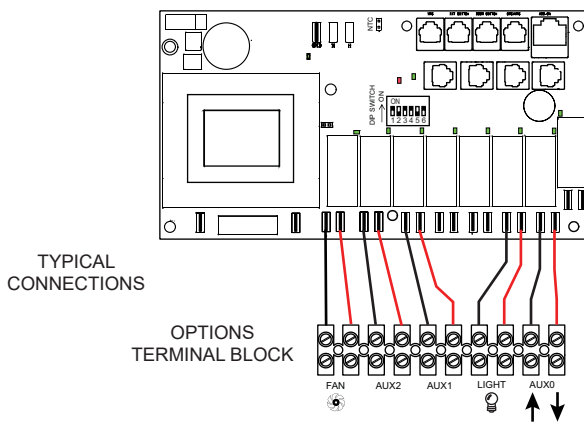

Install the Power Transformer

The transformer should be connected to a wall outlet in a conveniently accessible location, generally near the steamer.

- A 6 foot power cord with an attached NEMA-15 plug is supplied as part of the transformer.
- The transformer may be attached to the wall using its integral mounting tabs.
- Connect the black 12V output wire from the transformer to the steamer options terminal block at the Light loction's black wire. The wire may be lengthened by ading a 60°C 18 AWG copper wire. *A different option loction may be used if that option has been set up on the A6 control.*
- Connect the white 12V output wire from the transformer to the white wires from the LED cables. The wire may be lengthened by adding a 60°C 18 AWG copper wire.

Install the Light Assembly (Diagrams 3 & 4)

- Determine placement of the light.
- Drill a 2-5/8" hole for the lens assembly.
- Remove the lens from the lens housing and set it aside. The supplied lens wrench fits into holes in the lens to turn it and the spanner holds the housing while installing or removing the lens. *See Diagram 3*.
- Insert the lens housing through the hole with the silicone gasket on the room side of the ceiling and hand tighten nut against other side. (Approximately 13-15 ft-lbs). If the ceiling is too thick to use the nut, silicone the light assembly into place using 100% silicone sealant. *See Diagram 3.*
- Screw the reflector onto the lens housing then connect the light socket to the reflector.
- Insert the LED into the light socket through the lens opening then install the lens (see lens removal section above).
- Make sure the white wire from the transformer is connected to the LED (s).
- Connect the black wire from the LED(s) to the steamer in the terminal next to the black wire from the transfor-er. (See Diagram 4.) Note: *Each option connects to two terminals, each connected by a black and a red wire to relay contacts on the circuit board. The relay acts as a switch to control the option.*
- Secure the wires to the wall as needed to prevent stress or other risks of damage.

DIAGRAM 3

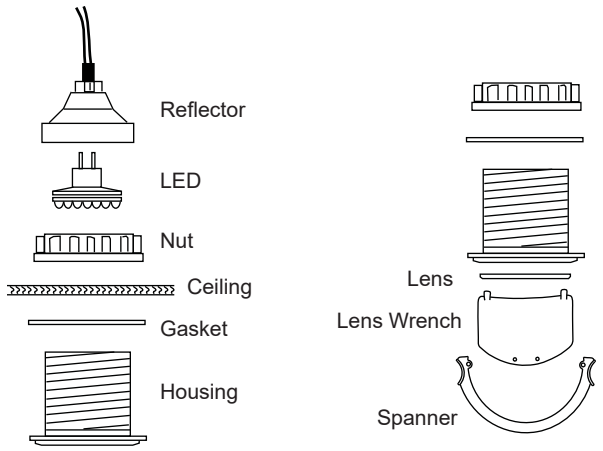

DIAGRAM 4

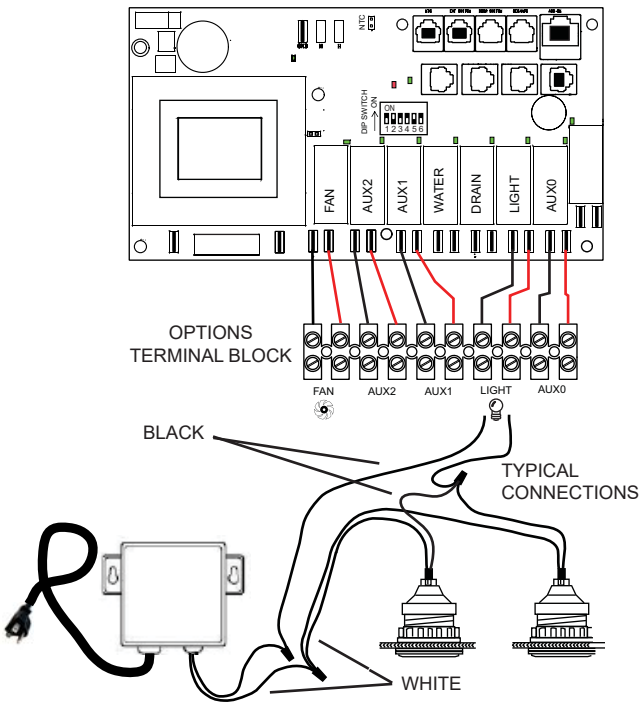

Additional Light Assemblies

For your convenience, two LEDs connection are included in the Chroma kit. Up to 5 LED light assemblies may be added by splicing their harness wires in parallel with the first two LEDs (for a maximum 7 LEDs).

Operation

The lights are low power LED assemblies with built in intelligence providing an array of pre-programmed light displays and easy synchronization of multiple lights. The last display selected will be active the next time the lights are turned on.

• To synchronize lights, such as after adding or replacing a light, turn the lights on then turn them off again for 6 to 8 seconds. then turn them on again. When the lights turn on again, they will blink a few times then all the lights will be reset to the initial display.

• To change light displays, turn the light off for 1 second or less then turn them on again. Repeat until your preferred display is lit.

Description of displays:

- Slow Color Wash - Color transition gracefully from color to color, cycling through the entire color wheel (approx 3 minutes for complete cycle).
- Fast Color Wash - Same as the slow color wash but complete cycle takes 1 minute.
- Slow Random Color - colors jump from one color to the next in random order. Each color duration lasts approximately 10-15 sec.
- Fast Random Color- same as the slow random but duration lasts 5 sec.
- High Speed Random Color - A rapid series of intense flashes of varying light colors.
- Cross fades - Color cycles back and forth gracefully between blue and green. Total cycle lasts 1 minute.
- Fixed Color - Static display of a single color. Available colors include: white, pink, lavender, light blue, dark blue, light green and dark green.

Item	Provided	Part #	Description
1	1	3164-51	Transformer, 120VAC-12VAC (with wire harness with light socket)
2	1	5258-12	Wire Harness with Light Socket, 8 ft
3	2	3160-71	Light, 22 LED, bright, FC210
4	2	3160-72	Lens Assembly

Contact Technical Support for additional/replacement parts.

amerec
P.O Box 2258 Woodinville, WA 98072
Phone: 425-951-1120
800-363-0251
Fax: 425-951-1130
email address: support@amerec.com