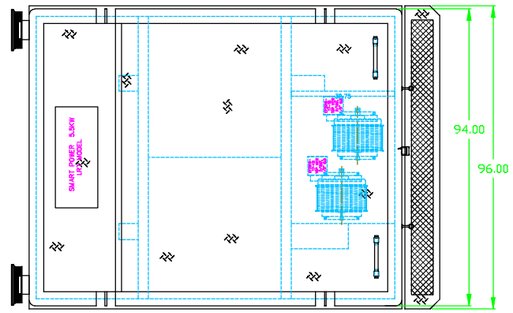

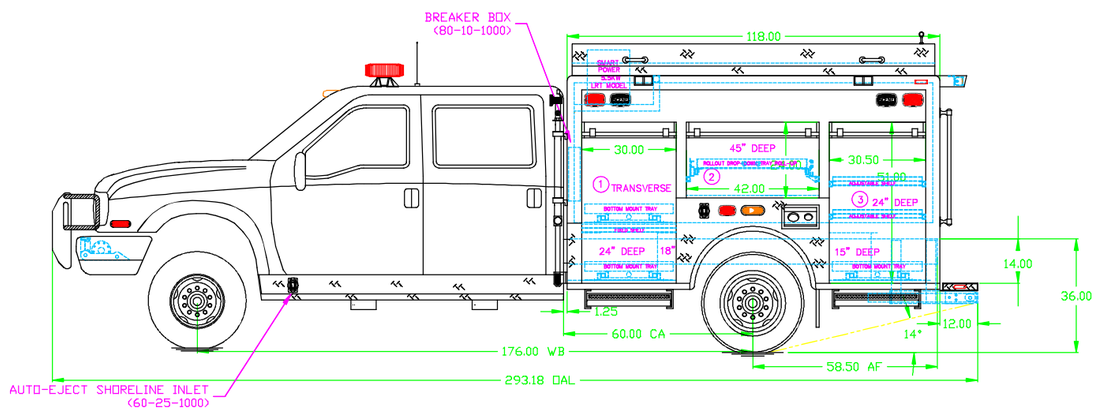

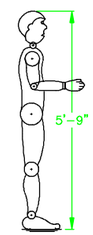

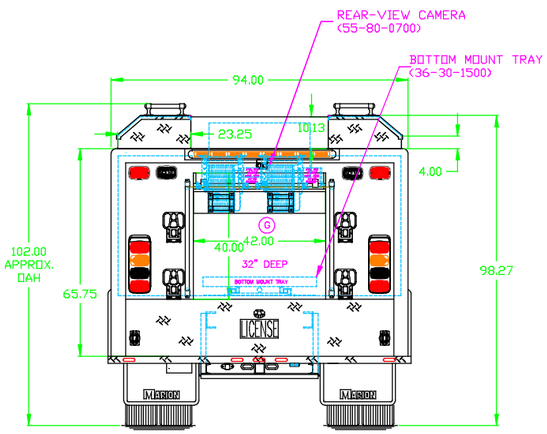

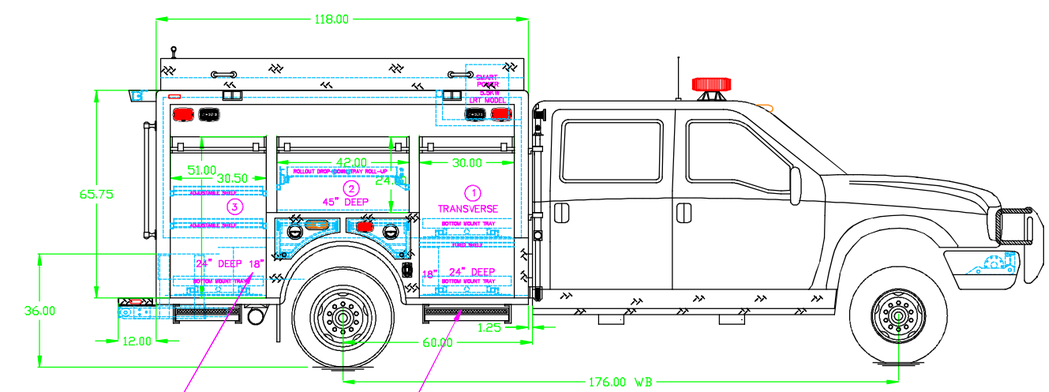

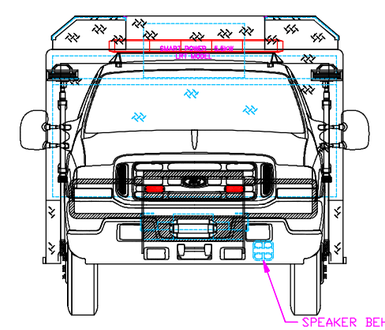

BOTTOM MOUNT TRAY
(36-30-1200)
CORNER NOTCH
FOR SPRING
SHACKLE
ALL LOWER
COMPARTMENTS

H20 GROUND LIGHTS
(65-40-5014)

SPEAKER BEHIND BUMPER (70-50-5215)

BID MBW JOB NUMBER

MAXIMUM OVERALL LENGTH 24'2" OR 290.40"
MAXIMUM OVERALL HEIGHT 7'-11" OR 95.00"

LTR	DATE	BY	DESCRIPTION
			MARION RESERVES THE RIGHT TO MAKE MINOR DIMENSIONAL CHANGES, AND DESIGN AND COMPONENT CHANGES FOR PRODUCT IMPROVEMENT

CHASSIS SPECS	
CHASSIS	FORD
MODEL	F550 CREWCAB 4x4
WB	173"
CA	60"

MARION

MARION BODY WORKS, INC.
P.O. BOX 500
MARION WISCONSIN 54950-0500
715/754-5261 FAX 715/754-5776

TITLE	10' RESCUE VEHICLE
FOR	MONTROSE, NY
DRAWN BY	JK
APPRVD BY	
DATE	4/21/15
SCALE	1/20
DRG. NO.	20150024
SHEET	1 OF 2