# INSOL TECHNICAL DATA SHEET

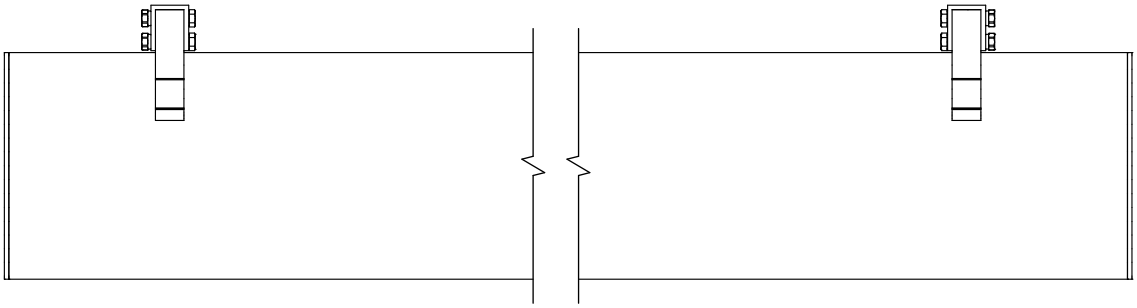

**PLAN VIEW**

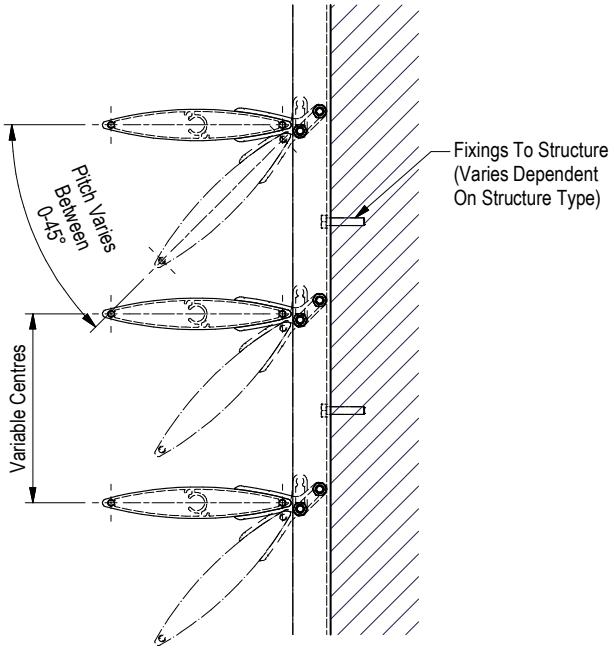


**SECTIONED VIEW**

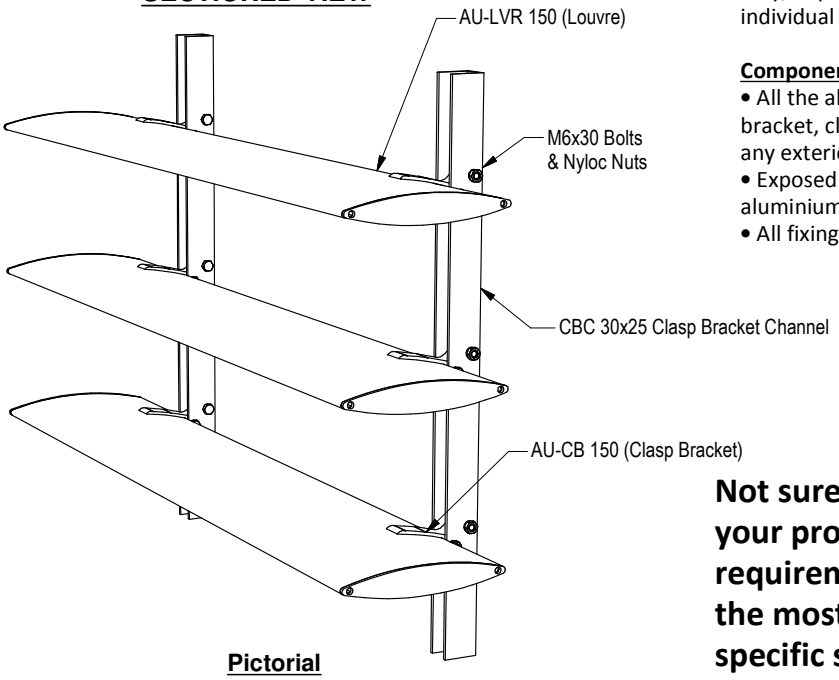


**Pictorial**

**Configuration and layout:**

- The louvre blades can be set at any centres.
- Blade angle can be set at any degree of pitch between 45° tilted upwards and 45° tilted downwards.
- Once the degree of pitch has been decided upon and the louvres are installed, the angle of the blades is fixed and cannot be changed.

**Assembly and Installation:**

- The clasp brackets and end caps are fixed to the louvre blade with stainless multi-grip rivets.
- Louvre blades can be easily detached (as may be required if a louvre is damaged, for example), by simply removing the stainless bolts and nyloc nuts that hold the clasp bracket to the mounting channel.

**Structural Requirements:**

- Clasp brackets and supports are required at centres appropriate to the wind loading on the louvre blade. See Span Data Table for spans relative to wind zones.
- The fixing of the clasp channel to the support structure varies dependent of the nature of the structure. Typically 14 gauge tec screws are used into timber, and M6 machine screws are used when fixing to steel or aluminium. The centres and size of fixing can vary, dependent on the engineered loadings of the individual project.

**Componentry and Finishes:**

- All the aluminium components (the louvre blade, clasp bracket, clasp bracket channel and end caps) can be finished with any exterior powder coat or grade of anodising.
- Exposed ends of the louvre blades are fitted with a 3mm aluminium end cap, finished to match the louvre.
- All fixings are stainless steel.

**Not sure if this is the correct fixing detail for your project? Contact Insol to discuss your requirements - we will be able to recommend the most suitable fixing methods for your specific scenario.**

# AURORA™ 150
# CLASP BRACKET SYSTEM

INSOL
Architectural Facade Treatments

© 2014 All rights reserved
Insol Ltd
Ph: 0800 34 6000
www.insolnz.co.nz

Scale: N.T.S.
Date: 7/03/2014

**AU-LVR 150 CB Ver. 1**