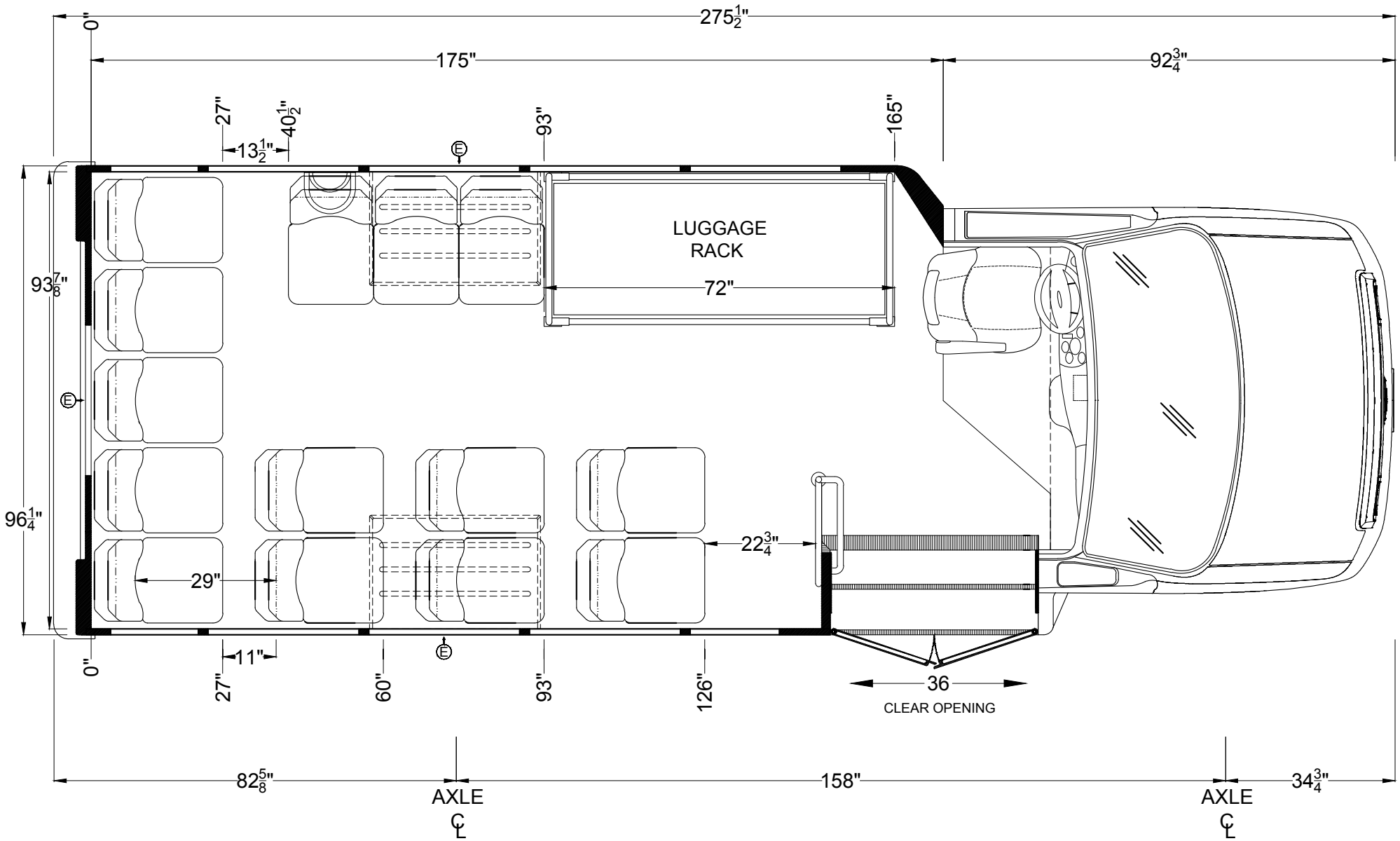

DAVEY COACH
SALES INCORPORATED

CHASSIS	CHASSIS MODEL	BUS MODEL	PASSENGER CAPACITY
FORD	E-450	TERRA TRANSIT	15 Total Passengers
14 PASSENGERS + DRIVER			
FORWARD SEATING, 72” Floor Mount Luggage			
WHEEL BASE	**OVERALL LENGTH**	**FLOOR LENGTH**	**ADDITIONAL FEATURES**
158”	23’	175”	