Product sheet
Molok Global Standard®

ORIGINAL
MOLOK®

Suitability
2500 l Molok Global Standard is suitable for collecting mixed waste etc.

Dimensions and materials

Volume	2500 l
Height	2950 mm, 1700 mm of which is installed under ground
Diameter	1140 x 1140 mm
Well body material	HD Polyethylene
Lid and filling lid	HD Polyethylene
Lifting bag	Polypropylene
Reinforced lifting bag	Polypropylene + PVC

Rotation molded well body is completely water proof. Filling hole situates about 1,1 m above ground level. Lifting bag is made of strong woven polypropylene. Safe Working Load (SWL) is indicated in the lifting bag. There is an aluminium lifting ring on the top of the lifting bag. Quick system or four lifting loops are attached to the lifting ring. The closing mechanism is situated at the bottom of the lifting bag. The SWL of standard lifting bag is 1250 kg.

Accessories

Quick system (standard)
Lifting bag (standard)
Reinforced Lifting bag
Semi-hard lifting bag
Semi-hard reinforced lifting bag
Support catch for the filling lid
Locking for filling lid

Lid alternatives

Standard lid
Standard lid with filling slot
High lid
High lid with hole
High lid with two holes
High lid with semi-round hole

Framing alternatives
Without framing
Print framing

Standards
Molok®-Deep Collection System complies with the requirements of EN13071-standard.
Molok®-lifting bags are tested according to ISO 21898-standard.

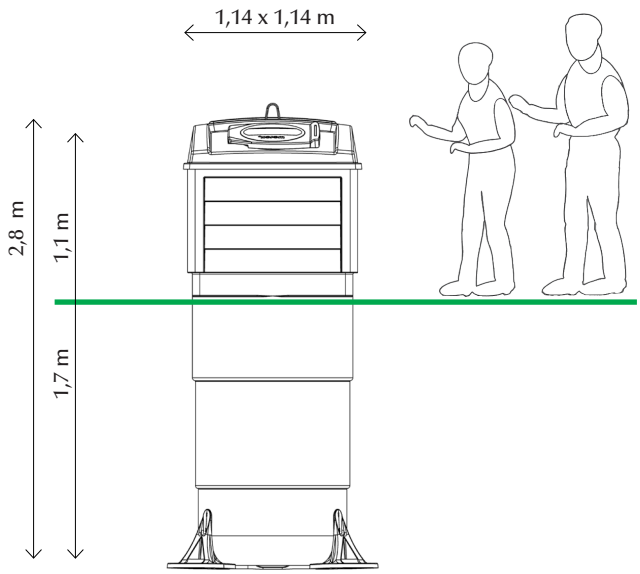

DEEP COLLECTION®

10/2016/MTJ © Molok Oy