PowerShield 8

Installation Manual

Table of Contents

1 Glossary 4
2 Introduction 5
3 Installation Quick Guide 6
4 The PowerShield 8 Battery Monitoring System 8
4.2 Controller 10
4.2.1 Power Supply 10
4.2.2 Front and Rear Panels 10
4.2.3 Hub Ports and BBus Communication 11
4.2.4 Installation 11
4.3 Hub 12
4.4 mSensor 13
5 Installation 14
5.1 Install Controller and Power-up 14
5.2 Number Blocks 14
5.3 Block Terminal Tags 15
5.4 Mounting Rail for Hubs and mSensors 15
5.5 mSensor Power Leads 16
5.6 Connect mSensors to Blocks 17
5.7 Install Hub 17
5.8 Connect BBus Cables 18
5.9 Install Current Transducer 19
5.10 Connect Ambient Temperature Probe(s) 20
5.11 Confirmation and Configuration 20
Appendix 1 – Controller Panels 21
Front Panel 21
Rear Panel 21
Appendix 2 – LED Behaviour 23
PowerShield Controller LEDs 23
mSensor and Hub LEDs 24
Appendix 3 – Controller LCD 25
Appendix 4 – Communication Options 26
RS-485 26
Cabling & Termination 26
Appendix 5 – Relays and Auxiliary Inputs 27
Relays 27
Auxiliary Inputs 27
Appendix 6 – mSensor Power Lead Connection 28
Dual mSensor and Blocks with 2 Terminals 28
Single mSensor and Block with 2 Terminals 29
Dual mSensor and Blocks with 4 Terminals 30
Single mSensor and Block with 4 Terminals 31
mSensor Power Leads with Block Temperature 32
mSensor Power Leads without Block Temperature 32
Appendix 7 – 4-Wire / Kelvin Connection 33
Resistance 33

2-Wire Resistance Measurement 33
4-Wire/Kelvin Resistance Measurement 34
Appendix 8 – DC Model Controller Wiring 35
DC Model Plug 35
Appendix 9 – Controller Specifications 37
Appendix 10 – Hub Specifications 38
Appendix 11 – mSensor Specifications 39
Appendix 12 - PowerShield 8 Installation Forms 40
6300-107 Facility Information Form (FIF) 40
6300-108 PowerShield 8 Controller Information Form (CIF) 41
6300-109 PowerShield 8 String Information Form (SIF) 42
6300-110 PowerShield 8 Block Mapping Form (BMF) 43

1 Glossary

Cell	The basic electrochemical unit that can receive, store, and deliver electrical energy.
Block	One or more cells in a container also known as a battery. The terms block and jar are interchangeable. For this manual the term has been standardised as block to avoid using the somewhat unwieldy convention of "block/jar" throughout.
String	Two or more blocks connected in series.
Battery Bank	A complete system of parallel connected strings.
PowerShield Controller	Data logger that periodically communicates with *PowerShield Hubs* and *PowerShield mSensors* to obtain system measurements.
PowerShield mSensor	A remote sensor that is connected to the blocks. It periodically measures the block voltage, ohmic value and temperature.
PowerShield Hub	A remote sensor that can be used to measure string current and ambient temperature of the battery bank. mSensors can be connected to it so that they share the same communication cable from the *PowerShield Controller*.
BBus	A daisy chain communication bus used between the *PowerShield Controller* and *PowerShield Hubs* or *PowerShield mSensors*.

2 Introduction

This manual is intended for use with the *PowerShield 8* battery monitoring system that uses the *PowerShield Controller* data logger*, PowerShield mSensor* battery sensors and the *PowerShield Hub*. This manual describes the installation of the system hardware.

About this manual

PowerShield 8 Installation Manual
Part Number 6300-095D
14 Nov 2018

The information contained in this manual is copyright and is not to be reproduced without the written authority of PowerShield Ltd.

PowerShield Limited
PO Box 102-190
NSMC
North Shore City 0745
New Zealand

PowerShield is committed to being responsible to take care of our environment. PowerShield products and packaging contain materials that are highly recoverable and recyclable. Please consider recycling through proper channels at your local packaging recycler and e-waste recycler.

3 Installation Quick Guide

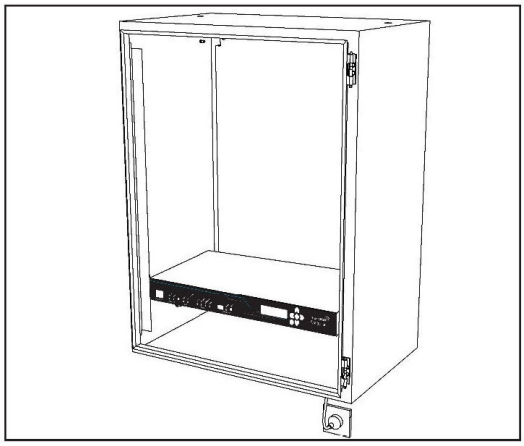

1. Install Controller and power up.

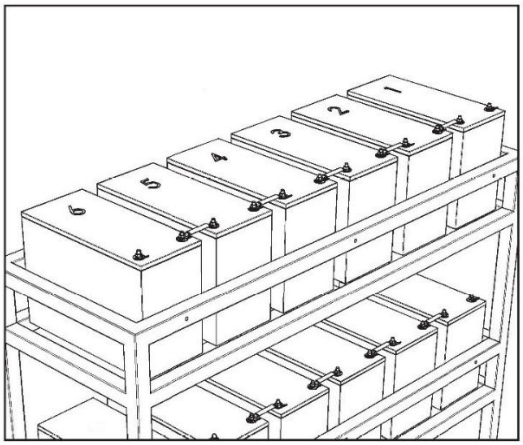

2. Number all blocks individually in a string starting at 1 for each string, e.g. 1-40, 1-40.

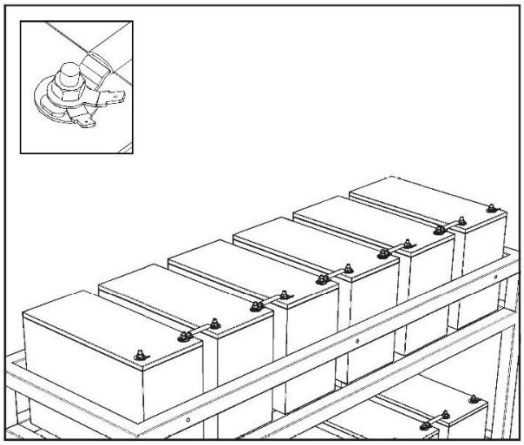

3. Fit 2 terminal tags per post.

Ensure tags are fitted on top of block interlinks.

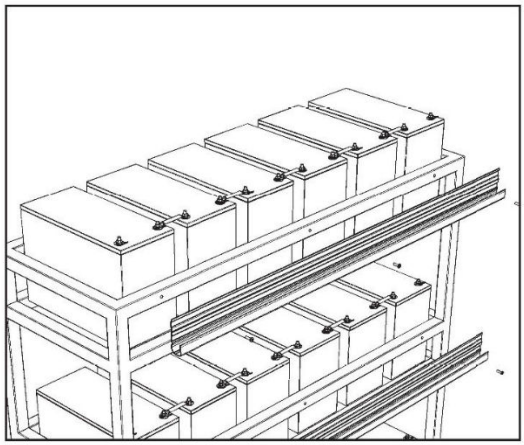

4. Fit mounting rail to suit block and mSensor layout.

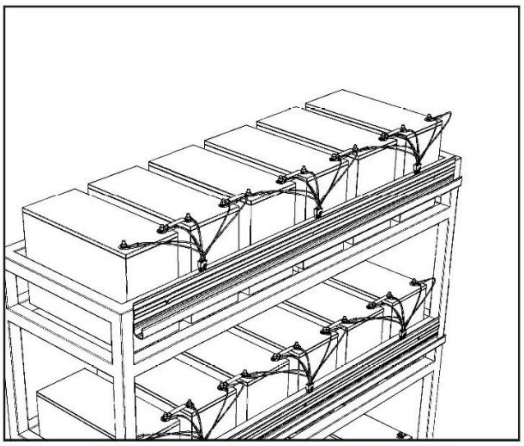

5. Fit mSensor power leads to terminal tags, confirming correct polarity.

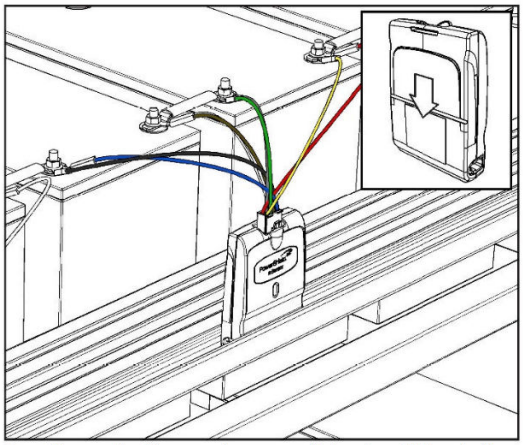

6. Connect mSensors in sequential order of IDs starting at Block 1, e.g. mSensor ID 1 on Block 1 & 2, mSensor ID 2 on Block 3 & 4, etc.

Ensure mSensor LED turns Green.

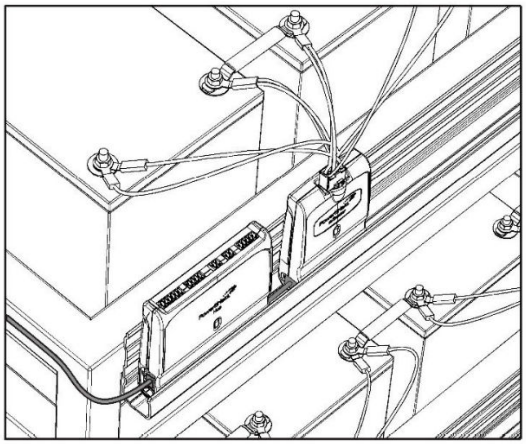

7. Install 1 Hub per String in a convenient location. For multiple strings, install Hubs in sequential order of ID.

Connect port cable from Controller to Hub. Ensure Hub LED flashes Orange.

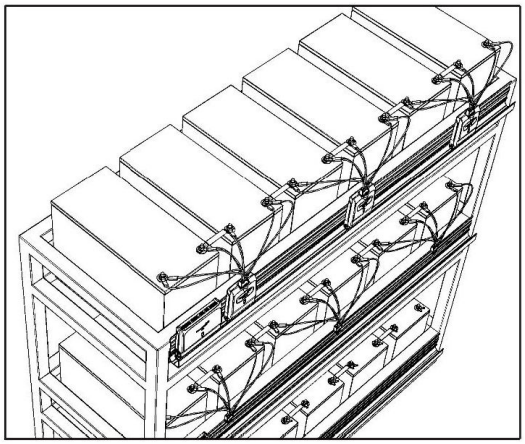

8. Connect BBus cables between Hub and all mSensors. Ensure mSensor LEDs flash Orange.

Remember: Maximum of 32 mSensors per port and all IDs on that port must be different.

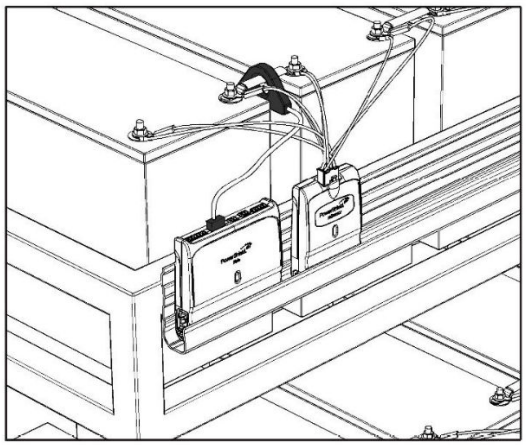

9. Install Current Transducer and connect cable to Hub.

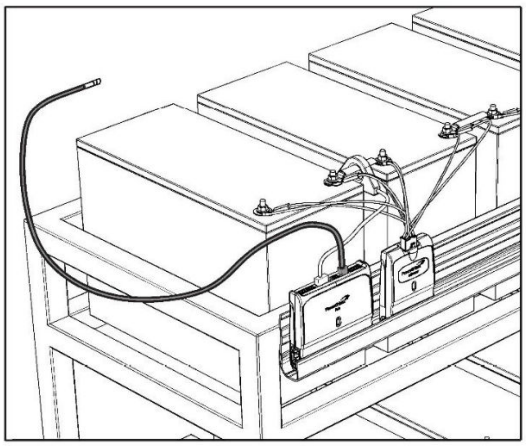

10. Fit Ambient Temperature sensor and connect to Hub.

Note: It is possible to use two Ambient Temperature sensors per Hub.

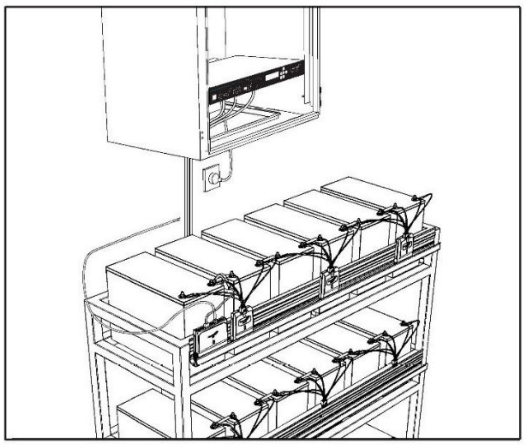

11. Confirm all Hub and mSensor LEDs flash Orange.

Secure all cables tidily.

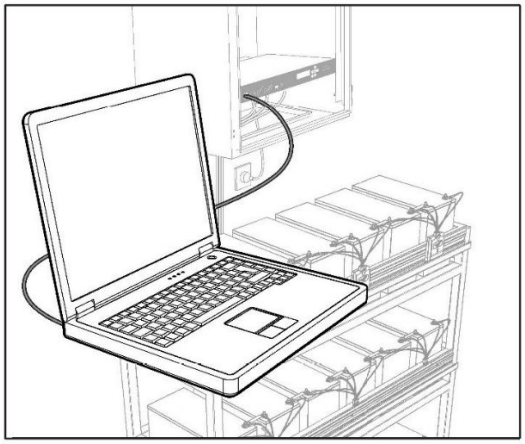

12. Connect to Controller Service Port and configure system as per the System Configuration Manual. Ensure all Hub and mSensor LEDs flash Green when configured.

4 The PowerShield 8 Battery Monitoring System

The *PowerShield 8* battery monitoring system is a permanent battery monitoring system that can monitor one or more strings of blocks. Parameters measured include:

- DC & AC voltage of each block
- Ohmic value of each block
- Temperature of each block
- DC string voltage
- DC & AC string current
- Ambient temperature
- Ambient humidity

The diagram on the following page shows an overview of the system which consists of the following hardware:

- *PowerShield Controller*
- *PowerShield Hubs*
- *PowerShield mSensors*
- Current Transducers
- Ambient Temperature sensors
- Hub-to-BBus adaptors (where applicable)

The *PowerShield Hub* is used to connect external sensors for measuring string current and ambient temperature and has an on board ambient humidity sensor. The *PowerShield mSensor* is used to monitor each block. The *PowerShield Controller* periodically interrogates each *Hub* and *mSensor* and processes the data, logging the information into memory at predefined intervals.

The distributed system architecture using local *Hubs* and *mSensors* installed at the battery bank, connected to the *PowerShield Controller* using a single CAT5 cable, allows one *PowerShield Controller* to monitor multiple remote strings. A single system can also monitor different voltage blocks and strings using appropriate *mSensors*.

PowerShield provides *Link* software for automated multi-site battery management.

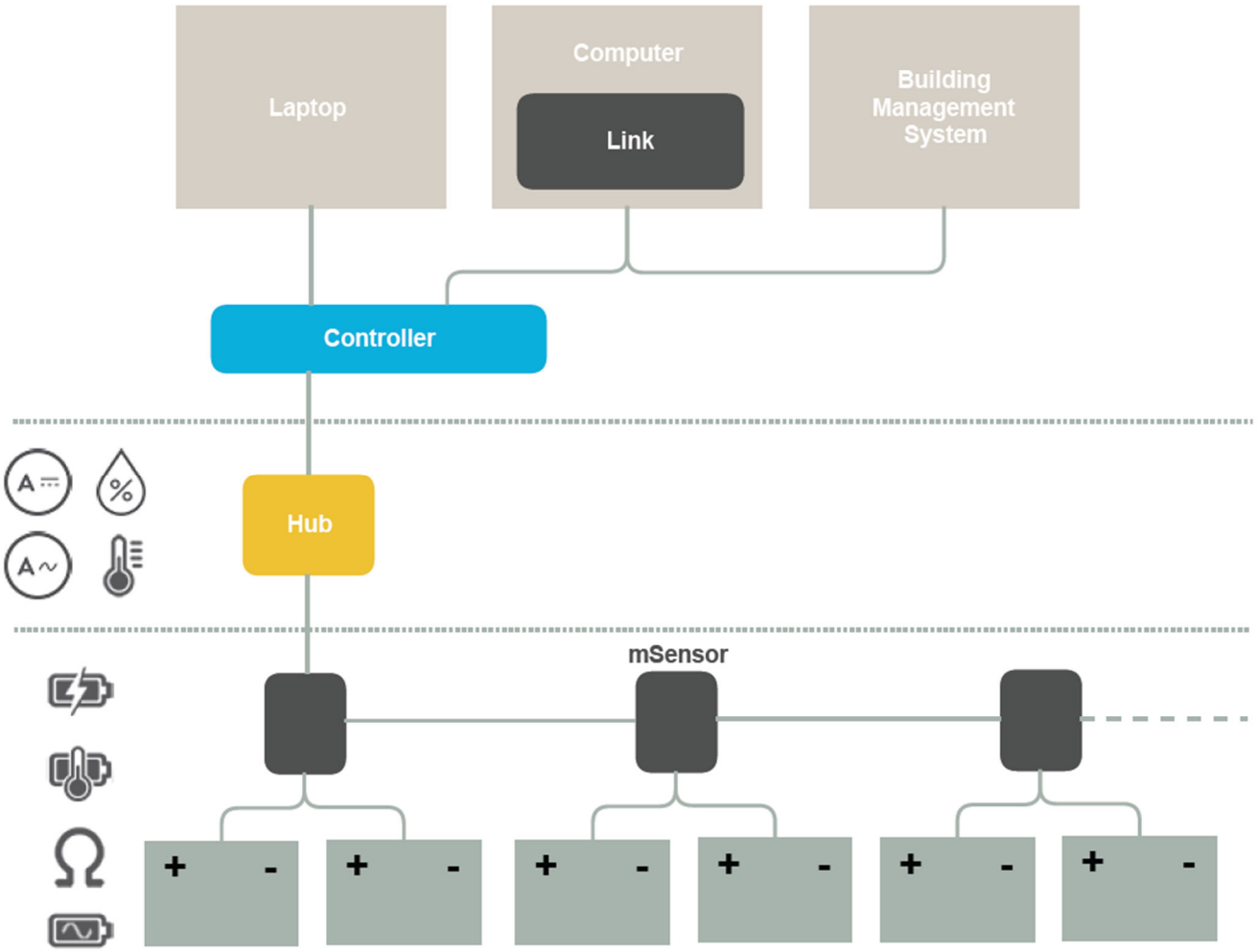
Laptop
Computer
Link
Building Management System
Controller
Hub
mSensor
+ -
+ -
+ -
+ -
+ -
+ -

4.2 Controller

The *PowerShield Controller* is supplied in a 1U high 19" rack case. The *PowerShield Controller* can be mounted in a 19" rack, on a wall, shelf, or similar using the mounting brackets provided. Ensure there is safe access to the rear connector panel and cable tray.

4.2.1 Power Supply

The *PowerShield Controller* is available in AC input or DC input models.

The AC input model has a standard 3-pin male IEC 60320 C14 appliance inlet.

The DC input models have a male 3-pin input socket and are supplied with a mating female screw terminal plug.

- Both AC and DC models must be installed by a service person and connected to a socket outlet or fixed wiring with a protective earth conductor or connector.
- A readily available disconnect device shall be incorporated in the building wiring or the socket outlet near the *PowerShield Controller* that is readily accessible.
- The power source for the DC models must be fused with a circuit breaker of no greater than 20A rating. The connection must be installed in a service access area.
- To ensure that the system operates during a power failure, it is recommended that the *PowerShield Controller* is powered by a battery backed supply that has sufficient backup time.

4.2.2 Front and Rear Panels

The front and rear panels of the *PowerShield Controller* are shown below.

Refer to Appendix 1 for a description of the front and rear panel features. Refer to Appendix 2 for a description of the front panel LED behaviour.

PowerShield Controller Front Panel

PowerShield Controller Rear Panel

4.2.3 Hub Ports and BBus Communication

The *PowerShield Controller* communicates with the *PowerShield Hubs* and *PowerShield mSensors* via the hub ports on the rear panel of the *Controller*. The hub ports use the *BBus* daisy chain communication bus with the devices being connected in series, one after another.

The hub port connectors are 8-pin RJ45 connectors. Standard CAT5 cabling is used to connect the *PowerShield Hubs* to the *PowerShield Controller* via the RJ45 connectors on each device. The *PowerShield Hub* should be the first device on each bus. The cable distance between the *PowerShield Controller* hub port and *PowerShield Hub* should not extend more than 50m (165ft). Contact PowerShield if longer distances are required.

The *PowerShield mSensors* should be connected to the *PowerShield Hub* using 4-core BBus interconnect cable via the 4-pin Modular Jack connectors on each device. The total cable length between the *PowerShield Hub* and last *PowerShield mSensor,* including the short interconnecting BBus cables between each device, should not extend more than 25m (82ft). Contact PowerShield if longer distances are required.

Each *PowerShield Controller* hub port is capable of supporting 1 *Hub* and up to 32 *mSensors*. For strings with a large number of blocks, additional *mSensors* will need to be used. These can be connected to spare *Controller* hub ports using an adaptor available from PowerShield that converts the *Controller* hub port CAT5 cable to 4-core BBus interconnect cable.

4.2.4 Installation

The *PowerShield 8* battery monitoring system must be correctly installed and configured in order to obtain accurate results. The installation of the system must be carried out only by suitably trained personnel. Installation must be in an adequately ventilated environment or the warranty may be invalidated.

The *PowerShield 8* battery monitoring system operates in a potentially hazardous environment making it imperative that all installation personnel have adequate training and experience. The system must be installed in a Service Access area.

Pay particular attention to the following points:

A) Elevated Operating Ambient Temperature – If installed in a closed or multi-unit rack assembly, the operating ambient temperature of the rack environment may be greater than room ambient. Therefore, consideration should be given to installing the equipment in an environment compatible with the maximum temperature specified in *Appendix 9 – PowerShield Controller Specifications*.

B) Reduced Air Flow – Installation of the equipment in a rack should be such that the amount of air flow required for safe operation of the equipment is not compromised.

C) Mechanical Loading – Mounting of the equipment in the rack should be such that a hazardous condition is not achieved due to uneven mechanical loading.

D) Circuit Overloading – Consideration should be given to the connection of the equipment to the supply circuit and the effect that overloading of the circuits might have on over-current protection and supply wiring. Appropriate consideration of equipment nameplate ratings should be used when addressing this concern.

E) Reliable Earthing – Reliable earthing of rack-mounted equipment should be maintained. Particular attention should be given to supply connections other than direct connections to the branch circuit (e.g. use of power strips).

4.3 Hub

The *PowerShield Hub* is used to connect external sensors for measuring string current and ambient temperature and has an on board ambient humidity sensor. Each *Hub* can read from one Current Transducer and up to two Ambient Temperature probes. It also has two Dry Contact inputs that can be used to read the state of external devices.

The *PowerShield Controller* communicates with the *Hubs* via the *Controller* hub ports, connected using CAT5 cable. It also supplies 24VDC power to the *Hubs* over this cable. Up to eight *Hubs* can be connected to a single *PowerShield Controller*, 1 per *Controller* hub port. This allows up to eight strings to be monitored with one *PowerShield Controller*.

The *Hub* is also the *BBus* link between the *PowerShield Controller* and *mSensors*. The *mSensors* are connected to the *Hub* using 4-core BBus interconnect cable.

Each *Hub* has a factory set ID number in the range 221 to 230. *Hub* ID 221 should be used for the first string and subsequent sequentially numbered *Hubs* are used for multiple string systems (where applicable).

The LED on the *Hub* indicates *Hub* state. Refer to Appendix 2 for *Hub* LED behaviour.

4.4 mSensor

The *PowerShield mSensor* connects to the blocks and periodically measures the block voltage, temperature and ohmic value. Each *mSensor* is specific to the block voltage to which it will be fitted, e.g. 2V / 6V / 12V.

Dual and single *mSensors* are available. A dual *mSensor* is used to monitor a pair of blocks located one after another in series. A single *mSensor* is used to monitor only one block. The *single mSensor* allows for installations containing strings with uneven numbers of blocks or where physical layout makes pairing of blocks impossible. The label on the *mSensor* will show whether it is single or dual.

Each *mSensor* has a factory set ID number. Dual *mSensors* are numbered with IDs in the range 1 to 200 while single *mSensors* are numbered 201 to 220. For ease of mapping of *mSensors* to blocks and subsequent system configuration, it is recommended to connect the *mSensors* to the blocks in sequential order of ID starting at ID 1. Each block in a string must be uniquely identified with a sequential number starting at 1. For correct automatic mapping of *mSensors* to blocks, the block numbering should start at the most positive block in the string. If single *mSensors* are used in a string, they should also be installed in sequential order of ID starting at ID 201.

The *PowerShield Controller* communicates with the *mSensors* via the *Controller* hub ports using the BBus daisy chain communication bus. The *mSensors* should be connected to the *PowerShield Hub* using 4-core BBus interconnect cable via the 4-pin Modular Jack connectors on each device. If a *Hub* is not used, it is possible to connect the *mSensors* to the *PowerShield Controller* using a Hub-to-BBus adaptor that converts the *Controller* hub port CAT5 cable to 4-core BBus interconnect cable.

The LED on the *mSensor* indicates sensor state. Refer to Appendix 2 for *mSensor* LED behaviour.

5 Installation

Complete the forms in Appendix 12 during the installation.

5.1 Install Controller and Power-up

The *PowerShield Controller* is supplied in a 1U high 19" rack case. Mount the *PowerShield Controller* securely into a 19" rack (not supplied), wall, shelf, or similar using the mounting brackets provided. Ensure there is safe access to the rear connector panel and cable tray.

When the *PowerShield Controller* is powered up, it will emit an audible alert and the green Power LED will light. Other LEDs on the front panel may also light.

NOTE: Ensure the *PowerShield Controller* is unable to move when installed – cables and connections must not be put under strain.

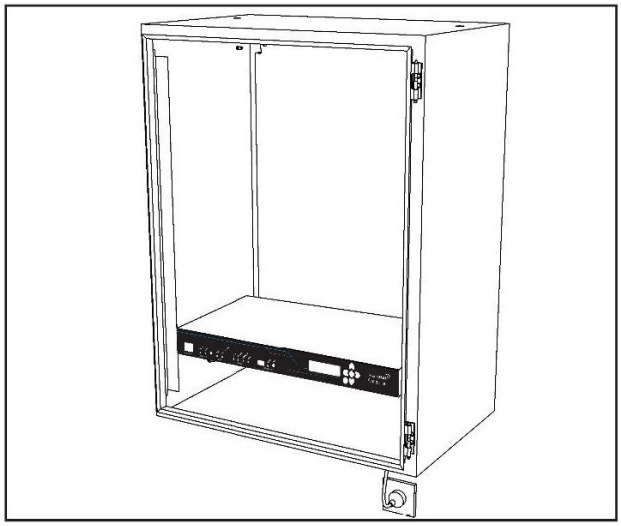

5.2 Number Blocks

Each block in string must be uniquely identified with a sequential number starting at 1, e.g. 1-32, 1-40 etc. For ease of mapping of *mSensors* to blocks and subsequent system configuration, it is recommended to start numbering at the most positive block in the string.

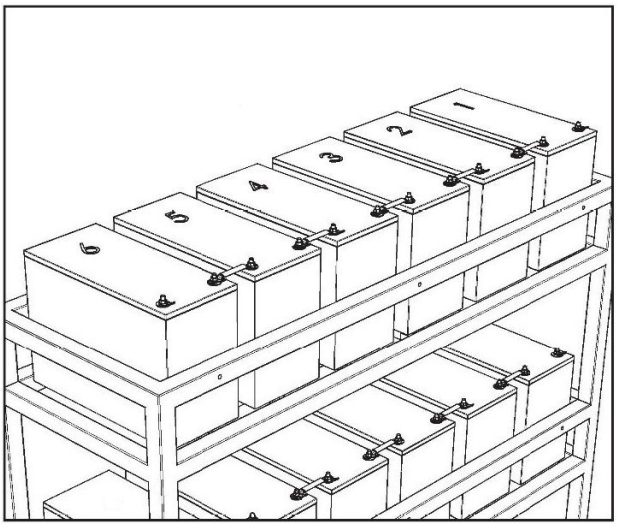

5.3 Block Terminal Tags

Ensure that all blocks have appropriate terminal tags fitted for connection to the *mSensors* as follows. For simplicity, it may be easier and more efficient to fit two tags to every terminal.

- Where a dual *mSensor* is to be used with a pair of blocks, fit two tags on the negative (-) terminal of the most negative block and two tags on the positive (+) terminal of the most positive block.
  Fit one tag on each of the remaining terminals.
- Where a single *mSensor* is to be used on a single block, fit two tags on all block terminals.

NOTES: The terminal tags must be suitable for 6.3mm x 0.8mm receptacles. The tag material is important for accurate measurements. PowerShield can supply a range of approved tags.

Place the tags on the top of the block interlinks and below any lock washers otherwise the current flow between the interlink and the battery may be reduced and could result in a 'hot spot'.

Do not bend the tags as this can damage the connector crimp and/or result in poor or loose connections with the *mSensor* power leads. Poor connections can have significant impact on impedance measurement. PowerShield reserves the right to void warranties where terminal tags are bent or modified.

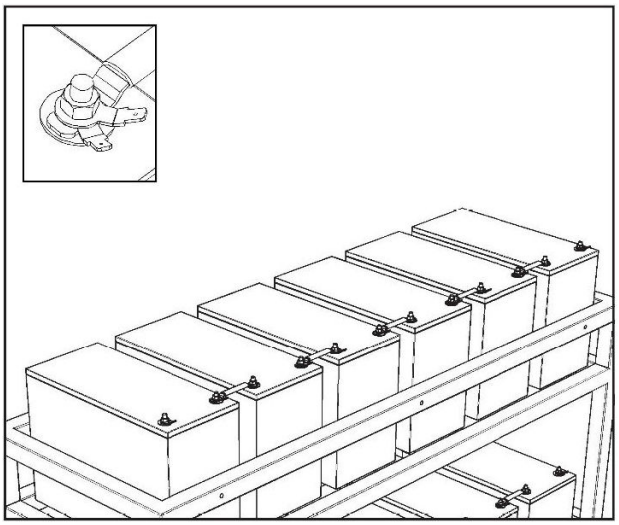

5.4 Mounting Rail for Hubs and mSensors

The mounting rail for the *Hubs* and *mSensors* can be fitted in any orientation and can be used with both battery racks and cabinets. Drill to suit and fasten with screws or cable ties.

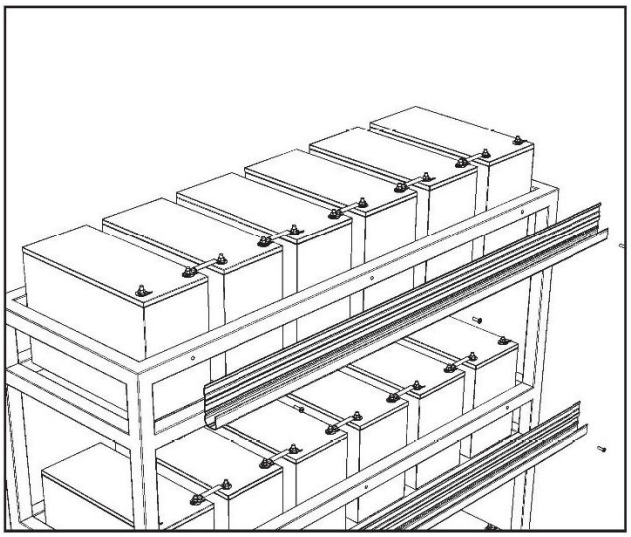

5.5 mSensor Power Leads

Fit the *mSensor* power leads to the block terminal tags with the correct polarity. Ensure the dual power leads are connected across an 'in series' pair of batteries. Power leads are available with or without Block Temperature sensors.

Refer to Appendix 6 for the recommended method of connecting the *mSensor* power leads.

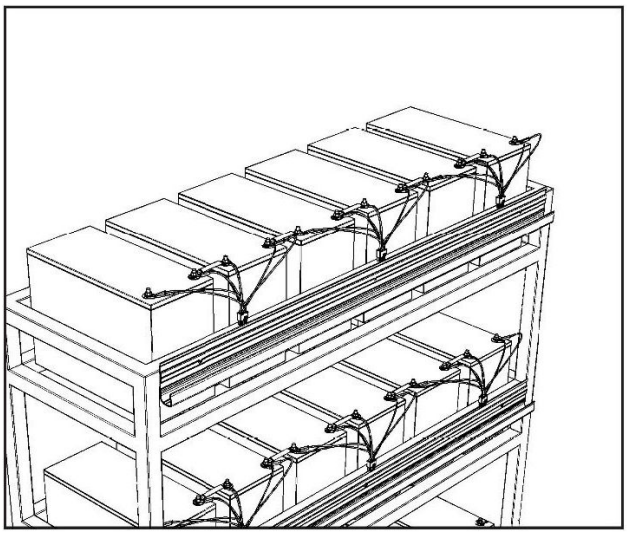

mSensor Power Leads with Block Temperature

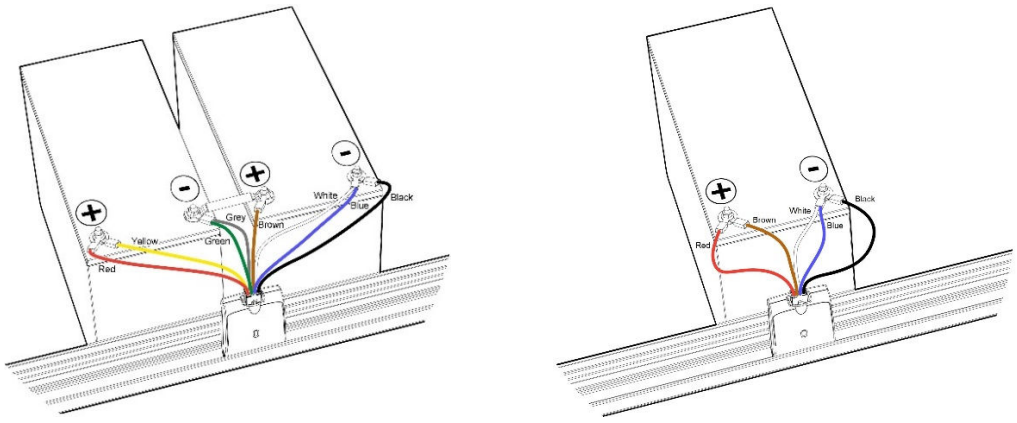

Dual mSensor **Single mSensor**

mSensor Power Leads without Block Temperature

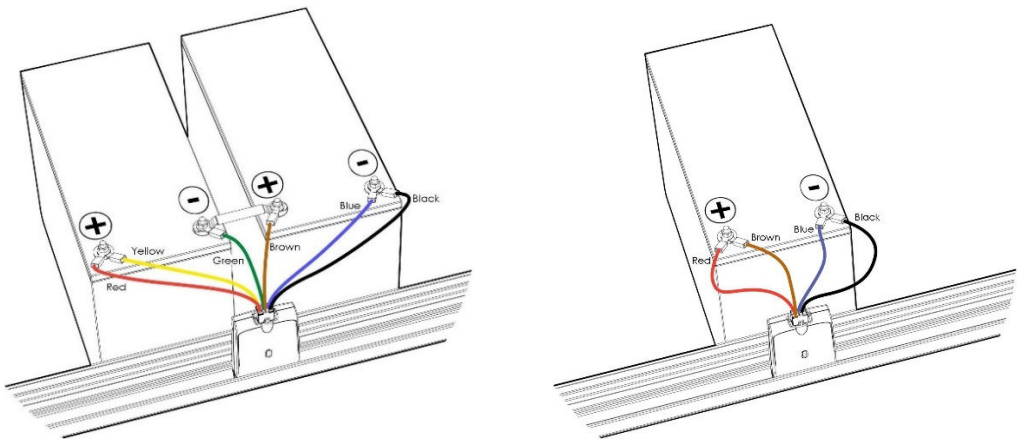

Dual mSensor **Single mSensor**

5.6 Connect mSensors to Blocks

Dual *mSensors* are numbered with IDs in the range 1 to 200 while single *mSensors* are numbered 201 to 220. For ease of mapping of *mSensors* to blocks and subsequent system configuration, it is recommended to connect the *mSensors* to the blocks in sequential order of ID. If single *mSensors* are being used for a string, install these as required but follow the sequential ID order approach.

Plug the *mSensors* onto the power leads of the blocks. The *mSensor* LED should light solid green when the *mSensor* is connected correctly. If the LED lights red, check the connections of the power lead at each block. A full list of *mSensor* LED states is available in Appendix 2.

Insert the *mSensor* into the mounting rail when done.

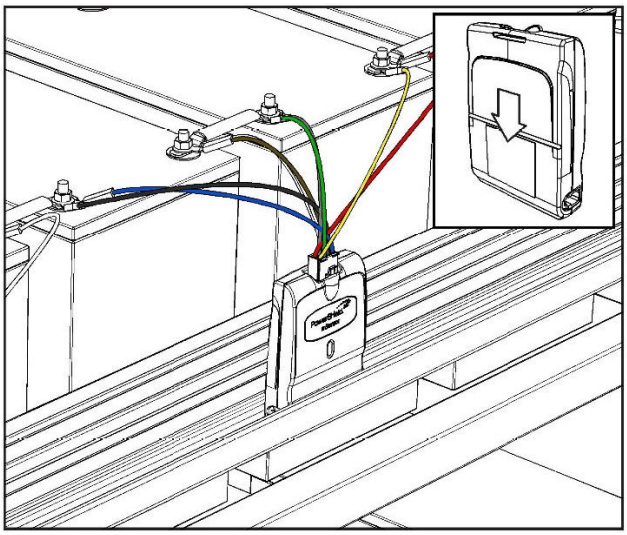

5.7 Install Hub

A *PowerShield Hub* is required per string to measure string current and ambient temperature. *Hubs* are numbered with IDs in the range 221 to 230. Use *Hub* ID 221 for the first string and subsequent sequentially numbered *Hubs* for multiple string systems (where applicable).

Insert the *Hubs* into the same mounting rail as the *mSensors* and connect CAT5 cable from the *PowerShield Controller* hub ports to each *Hub*. The *Hub* LED should flash orange if all is correct. A full list of *Hub* LED states is available in Appendix 2.

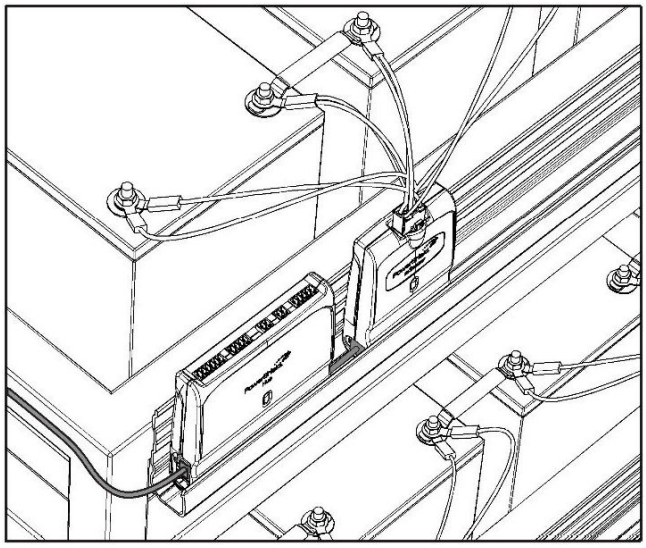

5.8 Connect BBus Cables

Connect the *mSensors* and *Hub* using suitable lengths of BBus interconnecting cables in a daisy chain fashion. Note that each *PowerShield Controller* hub port must not have more than 33 devices connected to it (1 *Hub* and up to 32 *mSensors*). In addition, the IDs of all devices on a single hub port must be different. The same IDs can be used on other hub ports.

For strings with a high number of blocks and *mSensors*, *mSensors* can be connected directly to additional *PowerShield Controller* hub ports using a CAT5-to-BBus adaptor which is available from PowerShield.

The *mSensor* LEDs should flash orange if all is correct. A full list of *mSensor* LED states is available in Appendix 2.

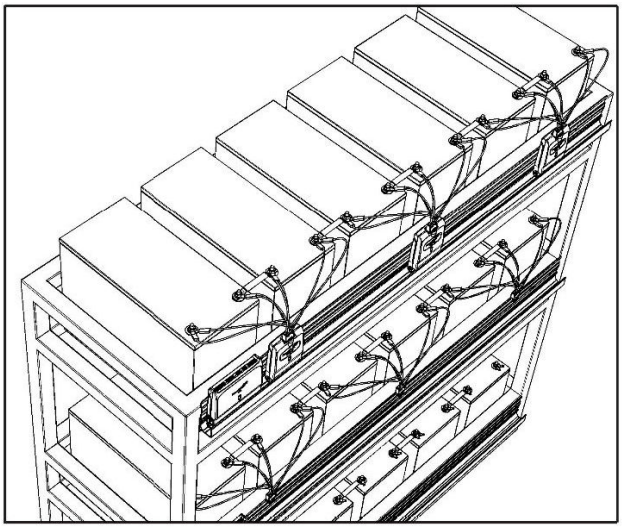

5.9 Install Current Transducer

A current transducer (CT) is required per string to measure string current. Install the current transducer anywhere on the primary string conductor and plug the current transducer cable into the *Current* connector of the *PowerShield Hub.*

NOTE: Ensure the current transducer selected has the appropriate rating for the expected string charge and discharge currents. The nominal rating of the current transducer should be similar to the typical maximum expected current flow. The current transducer has a measurement range of ±150% of the nominal rating.

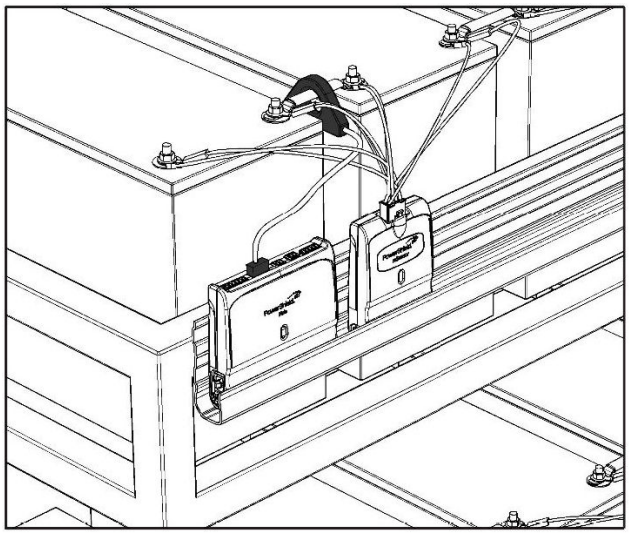

IMPORTANT: The direction of the current transducer is important. The transducer has an arrow on it to show the direction of current flow.

- If the current transducer is installed with its arrow pointing in the direction that current flows during a discharge event, the current transducer direction is considered to be *Standard*.

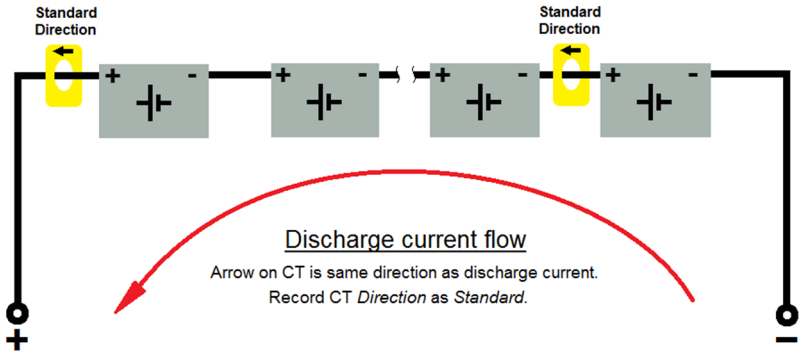

- If the current transducer is installed with its arrow pointing in the direction that current flows during a charge event, the current transducer direction is considered to be *Reversed*.

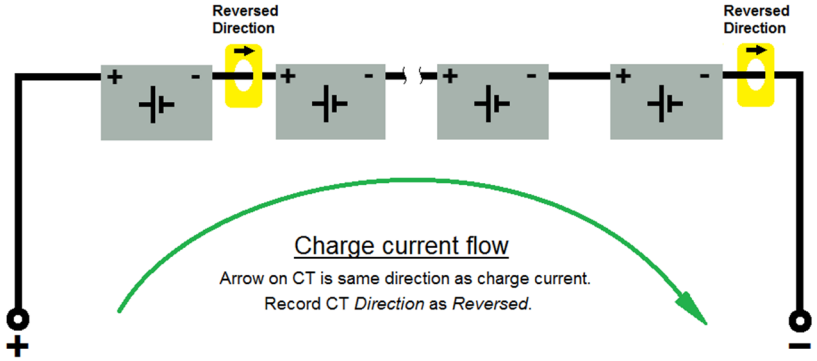

5.10 Connect Ambient Temperature Probe(s)

Up to two ambient temperature sensors can be used with each *Hub* to measure local ambient temperature(s).

Secure the ambient temperature sensor(s) in appropriate locations in or around the battery rack or cabinet but be aware of other factors that may affect the local environment such as HVAC, fans or other devices.

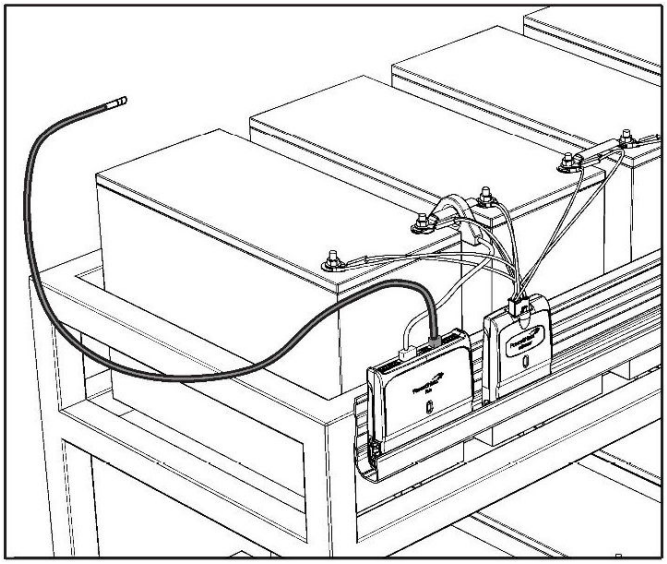

5.11 Confirmation and Configuration

Check that all installed parts are performing as expected and secure all cables with appropriate strain relief.

Complete the forms as in Appendix 12, connect to the *Service Port* Ethernet connector on the front of the *PowerShield Controller* and configure the system.

Refer to the *PowerShield Controller User Manual* (part number 6300-103) for more details on configuring the system.

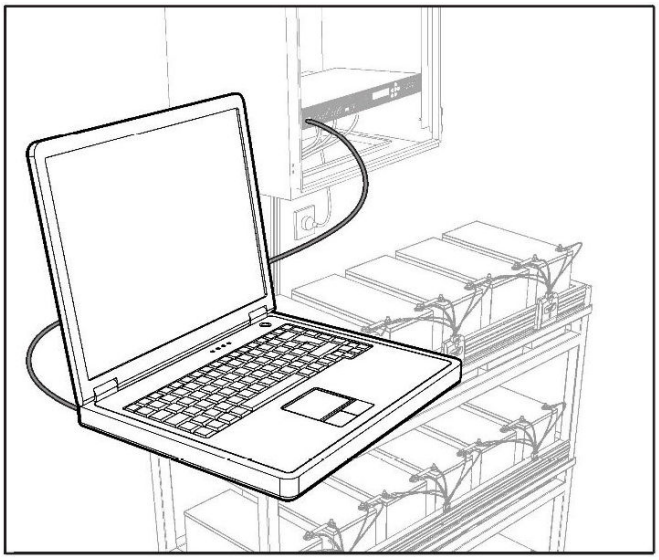

NOTE: All *Hub* and *mSensor* LEDs should flash green if the system is installed and configured correctly.

Appendix 1 – Controller Panels

Front Panel

The front panel has the following features:

- Service Port: This is an Ethernet port that can be used to temporarily connect to the *PowerShield Controller* on site.
- LEDs: These indicate system behaviour. Refer to Appendix 2 for a description of the LED states.
- USB Port: The USB Port can be used to copy *Controller* data and configuration files to a USB Flash Drive.
- USB Save Button: This button is used to start the copying of files to the USB Flash Drive.
- LCD: The LCD displays some system information. Navigation is via the 6-key keypad. Refer to Appendix 3 for a description of the LCD menu system and information displayed.

Rear Panel

The rear panel has the following features (viewed from right to left):

- Port 1: This is an Ethernet port that is intended as a permanent LAN connection for the *PowerShield Controller*. The behaviour of the LEDs are as follows:

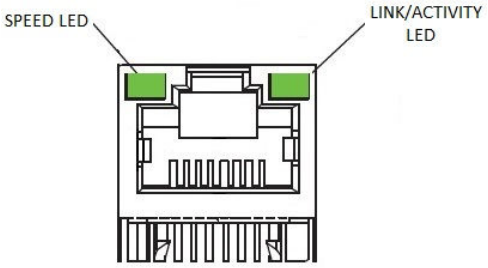

Name	Colour	Description
Speed	Green	On if LAN connection is operating at 1Gbps.
Link/Activity	Green	On if LAN Ethernet link is up. Flashes during activity.

- Port 2 & 3: These ports are for optional communication devices. Refer to Appendix 4 for more details.
- Relays: The *PowerShield Controller* has 4 relays that can be used to control or trigger external devices when certain events occur. Refer to Appendix 5 for details of the relay terminals.
- Auxiliary Inputs: The *PowerShield Controller* has 2 dry contact inputs that can be used to read the state of external devices. Refer to Appendix 5 for details of the Auxiliary Inputs.

- Hub Ports: The *PowerShield Controller* has 8 hub ports that can be used to communicate with *Hubs* or *mSensors*. The behaviour of the LEDs on each hub port are as follows:

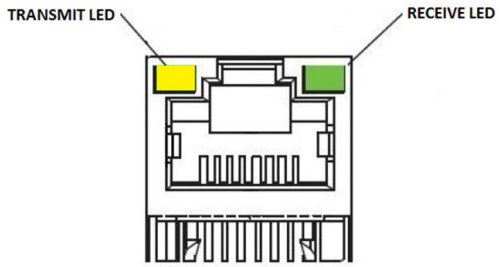

Name	Colour	Description
Transmit	Yellow	Flashes when the *Controller* is transmitting data.
Receive	Green	Flashes when the *Controller* is receiving data.

- Power Connector: The *PowerShield Controller* is available in AC input or DC input models.
  The AC input model has a standard 3-pin male IEC 60320 C14 appliance inlet as shown below:

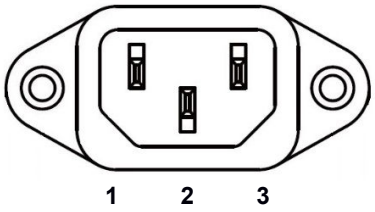

Pin	Function
1 (Left)	Neutral
2 (Centre)	Earth
3 (Right)	Live

The DC input models are fitted with a male 3 way input socket as shown below:

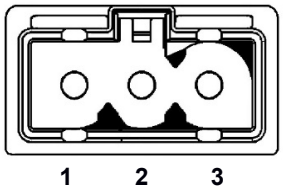

Pin	Function
1 (Left)	DC supply positive
2 (Centre)	Earth
3 (Right)	DC supply negative

The DC input models are supplied with a mating female screw terminal plug. Refer to Appendix 8 for wiring details of the DC input model plug.

- Cable Tray: The case features a cable tray that extends beyond the rear panel connectors. Cables can be secured to the cable tray to prevent them being accidentally unplugged and provide some strain relief.

Appendix 2 – LED Behaviour

PowerShield Controller LEDs

The *PowerShield Controller* has LEDs on the front panel for on-site information. They will exhibit varying behaviour as described below:

Name	Colour	Description
Controller Power	Green	On continuously when powered.
Controller Alarm	Red	On continuously if the PowerShield Controller has an internal system fault. Should be off under normal circumstances.
LAN Speed	Green	On if LAN connection is operating at 1Gbps.
LAN Link/Activity	Green	On if LAN Ethernet link is up. Flashes during activity.
Battery Alarm	Red	On if there is a battery or string alarm.
Battery Warning	Orange	On if there is a battery or string warning.
Battery Discharge	Orange	On if all strings are in discharge. Flashes if one or more strings in discharge.
Battery Float	Orange	On if all strings are in float. Flashes if one or more strings in float.
USB Status	Orange	Off if there is no external USB device present or when it is safe to unplug the device. On if the USB device is ready for use. This state should occur shortly after a device has been plugged in and detected successfully. Flashes during activity. Note: Pressing the USB Save button also affects the state of the USB Status LED.

mSensor and Hub LEDs

The *mSensor* and *Hub* have tri-colour LEDs that will exhibit varying behaviour as described below. The behaviour is the same for both devices.

Colour	State	Description
Green	Continuous	Device is connected correctly. For an mSensor, this indicates that the sensor is connected correctly to the batteries being monitored and the battery voltages are appropriate.
Red	Continuous	Device is not connected correctly of has a fault. For an mSensor, this may indicate that the sensor has detected a problem with the wiring harness or battery.
Orange	Continuous	Device is in locate mode.
Green	Single Flash	Device is detected and operating as normal. No warnings or alarms detected.
Orange	Double Flash	Device is receiving communication but has not been detected by the *PowerShield Controller*.
White	Continuous	Applies to *Hub* only. Device is in boot loader mode and waiting for commands.
White	Single Flash	Applies to *Hub* only. Device is in boot loader mode and updating firmware.

Notes:

Single Flash = On for 0.25s, off for 3.75s.
Double Flash = On for 0.25s, off for 0.25s, on again for 0.25s and then off for 3.25s
.

Appendix 3 – Controller LCD

The *PowerShield Controller* LCD can be used to view system information. The information is displayed by pressing the keypad buttons to access the required levels as shown below. The buttons operate as follows:

- Use the ▲▼◀▶ buttons to scroll through the menu levels.
- Use the ✓ button to select a level.
- Use the ✖ button to return to the previous level.
- The menu system is shown below:

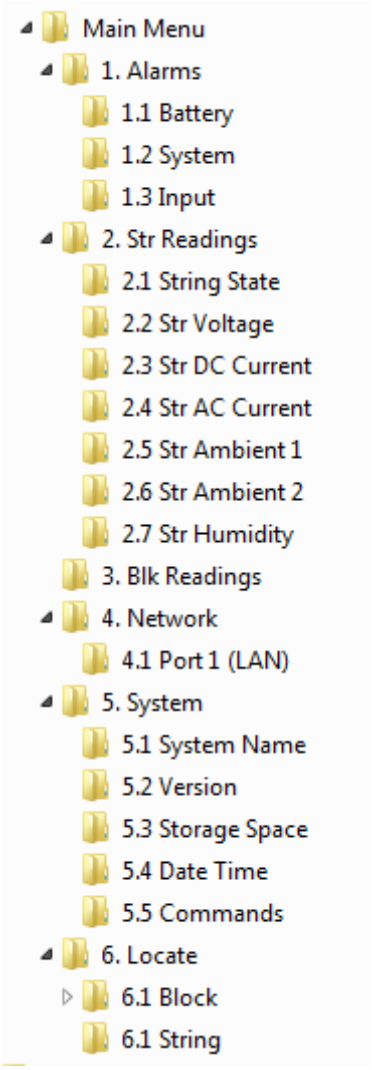

Appendix 4 – Communication Options

The *PowerShield Controller* has two internal slots for optional communication cards. The connectors for these cards will be fitted to the Port 2 or Port 3 openings in the rear panel.

These cards offer an optional way of communicating with the *PowerShield Controller* using a MODBUS RTU protocol.

Refer to the *PowerShield Controller User Manual* (part number 6300-103) for details of how to configure the cards.

RS-485

The RS-485 card implements 2-wire (half-duplex) transmission. The RS-485 signals can be accessed at the 4-way screw terminal connector on the rear panel of the *PowerShield Controller* as shown below. If more than one Slave is on the RS-485 bus, connect the additional Slaves using a daisy-chain approach and join the signal wires at the 4-way connector.

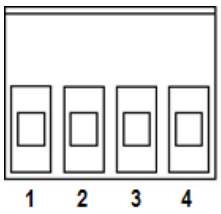

Pin	Name	Function
1, 4	Common (C)	Common signal reference ground for RS-485 differential pair. This should be connected to the ground of the Master device for correct signal level translation and to limit common mode voltages.
2	Data+ (B)	Positive signal of RS-485 differential data pair.
3	Data- (A)	Negative signal of RS-485 differential data pair.

Cabling & Termination

The diagram below illustrates a RS-485 Master with multiple Slaves.

It is recommended to use twisted pair wire for the RS-485 signals for improved noise immunity.

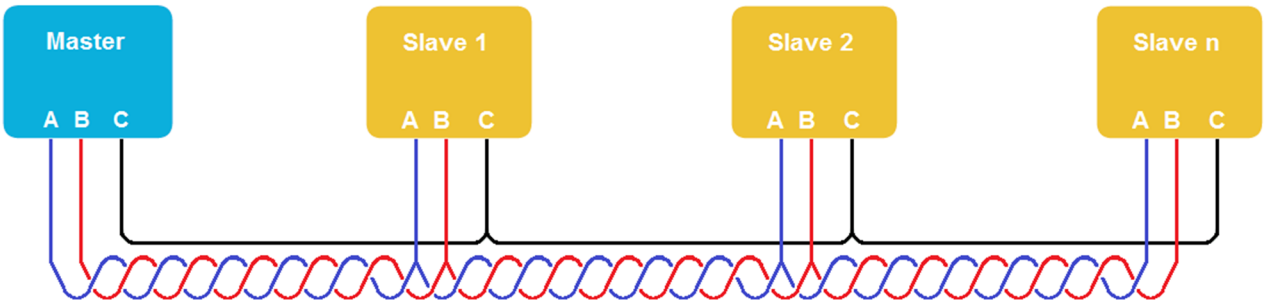

For long cable runs or where signal reflections are an issue, it is good practice to terminate the signal wires at each end of the cable with a resistor equal to the characteristic impedance of the cable. A typical value for 24 AWG twisted pair cable is 120Ω.

To terminate the cable at the *PowerShield Controller*, fit a suitable resistor between pins 2 & 3 of the 4-way connector.

Appendix 5 – Relays and Auxiliary Inputs

Relays

The *PowerShield Controller* has four relays that can be used to trigger a piece of external equipment when certain events are detected. For example, a relay could be used to turn on a light, sound a beeper or trigger an input to a SCADA/Building Management System when the event occurs. The relay will be in its normal state when the event it is associated with is not active. If the event occurs, the relay will be activated.

The relays are Single Pole Double Throw relays and have 3 terminals as shown below (illustration shows relay in not activated state). The relay terminals can be accessed at the rear panel of the *PowerShield Controller* using screw terminal connectors.

The relay contacts are rated for 1A, 30VDC. They must not be used to switch higher, AC or DC, voltages.

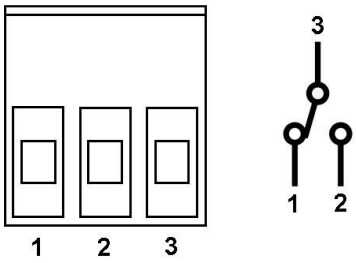

Pin	Name	Function
1	Normally closed contact	The Common Contact is connected to this pin when the relay is not activated. Connect external circuit to this pin and the Common Contact if you want the circuit to be on when the relay *is not* activated.
2	Normally open contact	The Common Contact is connected to this pin when the relay is activated. Connect external circuit to this pin and the Common Contact if you want the circuit to be on when the relay *is* activated.
3	Common contact	Connects to Normally Open or Normally Closed contact depending on relay state.

Auxiliary Inputs

The *PowerShield Controller* has two auxiliary inputs that can be used to read the state of a dry contact switch in third party equipment. To activate the auxiliary input simply short the terminals of the non-polarised two way connector.

Appendix 6 – mSensor Power Lead Connection

It is important to connect and install the *mSensor* power lead correctly. The following diagrams show the recommended method of connecting an *mSensor* to blocks with 2 or 4 terminals per block.

Failure to connect and install the *mSensor* power lead correctly may lead to unacceptable variation in readings between sensors.

Dual mSensor and Blocks with 2 Terminals

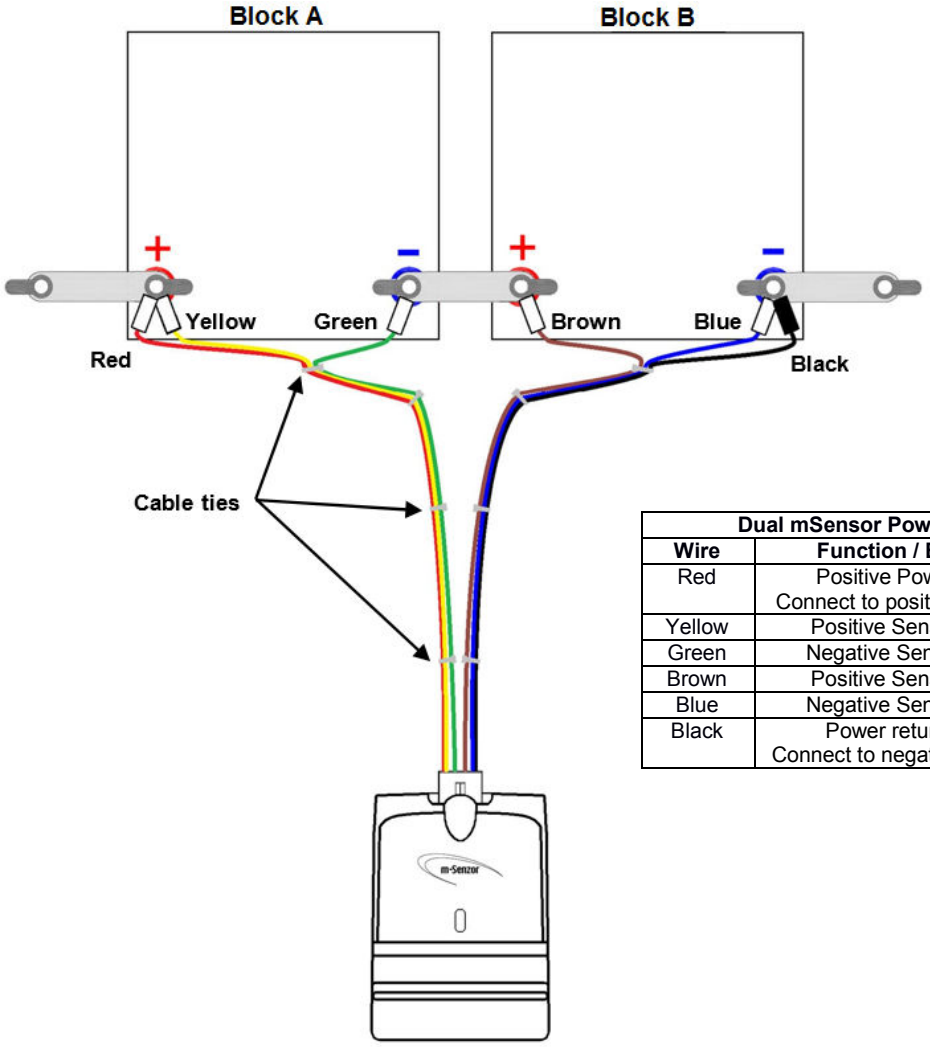

Dual mSensor Power Lead Wires	
Wire	**Function / Block Connection**
Red	Positive Power wire for sensor. Connect to positive terminal of Block A.
Yellow	Positive Sense wire for Block A.
Green	Negative Sense wire for Block A.
Brown	Positive Sense wire for Block B.
Blue	Negative Sense wire for Block B.
Black	Power return wire for sensor. Connect to negative terminal of Block B.

Please note the following important points:

- The power lead is manufactured with cable ties in order to keep the *Sense* wire pairs and the *Power* wires closely coupled.
- Try to keep the *Sense* wire pairs and *Power* wires closely coupled as much as possible.
- Where possible, do not remove the cable ties.
- The cable ties nearest the block terminals may be need to be repositioned to allow the wires to be connected to the block terminals.
- Do not connect the Green and Brown Sense wires to the terminal of one block. Connect them to the positive and negative terminals of the respective blocks.

Single mSensor and Block with 2 Terminals

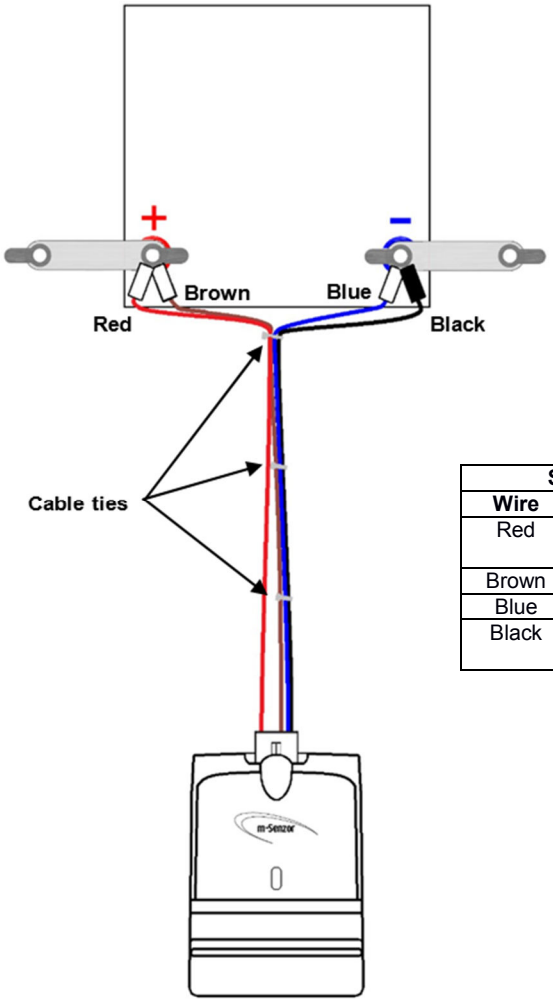

Single mSensor Power Lead Wires	
Wire	**Function / Block Connection**
Red	Positive Power wire for sensor. Connect to positive terminal of Block.
Brown	Positive Sense wire for Block.
Blue	Negative Sense wire for Block.
Black	Power return wire for sensor. Connect to negative terminal of Block.

Please note the following important points:

- The power lead is manufactured with cable ties in order to keep the *Sense* wire pairs and the *Power* wires closely coupled.
- Try to keep the *Sense* wire pairs and *Power* wires closely coupled as much as possible.
- Where possible, do not remove the cable ties.
- The cable ties nearest the block terminals may be need to be repositioned to allow the wires to be connected to the block terminals.

Dual mSensor and Blocks with 4 Terminals

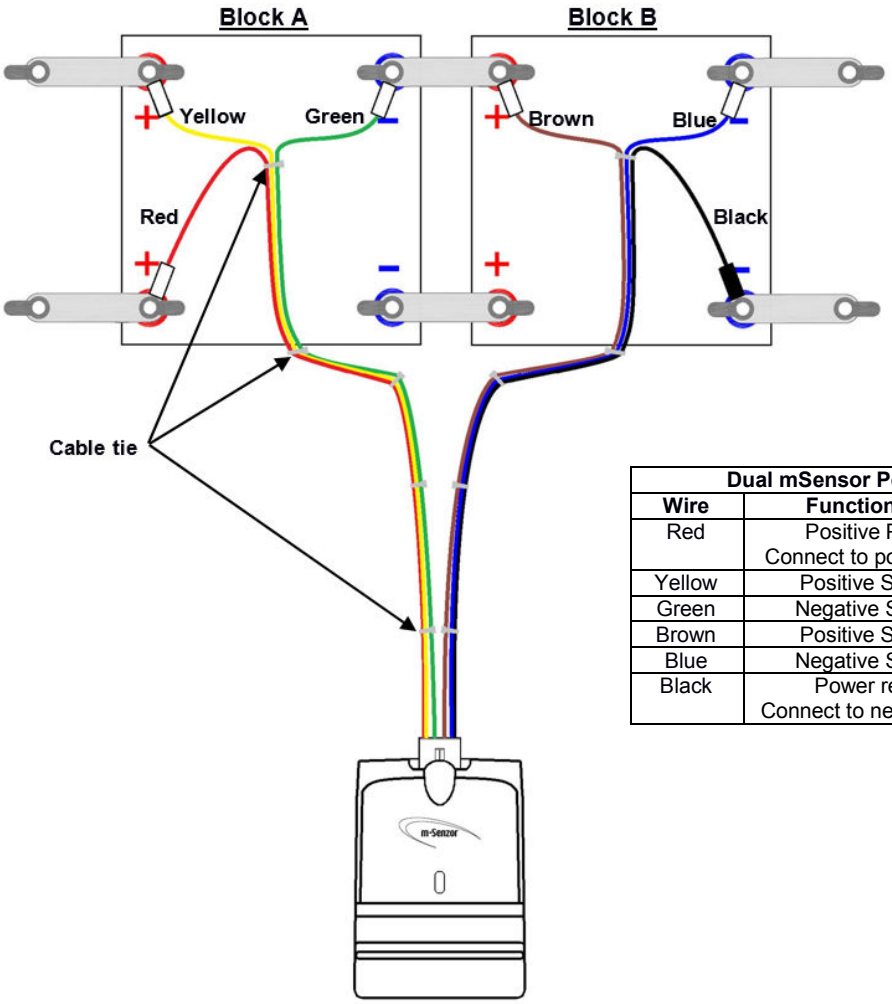

Dual mSensor Power Lead Wires	
Wire	**Function / Block Connection**
Red	Positive Power wire for sensor. Connect to positive terminal of Block A.
Yellow	Positive Sense wire for Block A.
Green	Negative Sense wire for Block A.
Brown	Positive Sense wire for Block B.
Blue	Negative Sense wire for Block B.
Black	Power return wire for sensor. Connect to negative terminal of Block B.

Please note the following important points:

- The power lead is manufactured with cable ties in order to keep the *Sense* wire pairs and the *Power* wires closely coupled.
- Try to keep the *Sense* wire pairs and *Power* wires closely coupled as much as possible.
- Where possible, do not remove the cable ties.
- The cable ties nearest the block terminals may be need to be repositioned to allow the wires to be connected to the block terminals.
- Do not connect the Red and Black *Power* wires to the same terminals as the Yellow and Blue *Sense* wires.
- Do not connect the Green and Brown Sense wires to the terminal of one block. Connect them to the positive and negative terminals of the respective blocks.

Single mSensor and Block with 4 Terminals

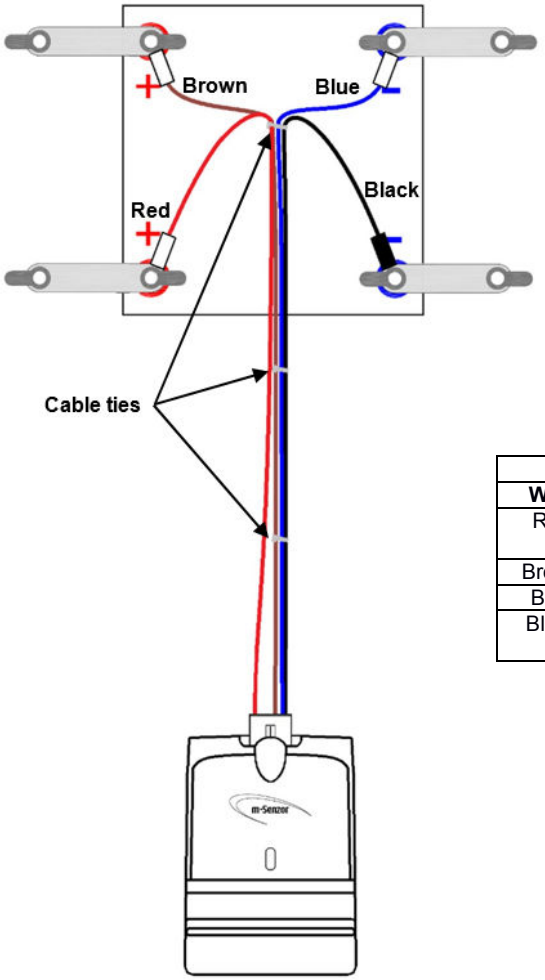

Single mSensor Power Lead Wires	
Wire	**Function / Block Connection**
Red	Positive Power wire for sensor. Connect to positive terminal of Block.
Brown	Positive Sense wire for Block.
Blue	Negative Sense wire for Block.
Black	Power return wire for sensor. Connect to negative terminal of Block.

Please note the following important points:

- The power lead is manufactured with cable ties in order to keep the *Sense* wire pairs and the *Power* wires closely coupled.
- Try to keep the *Sense* wire pairs and *Power* wires closely coupled as much as possible.
- Where possible, do not remove the cable ties.
- The cable ties nearest the block terminals may be need to be repositioned to allow the wires to be connected to the block terminals.
- Do not connect the Red and Black *Power* wires to the same terminals as the Brown and Blue *Sense* wires.

mSensor Power Leads with Block Temperature

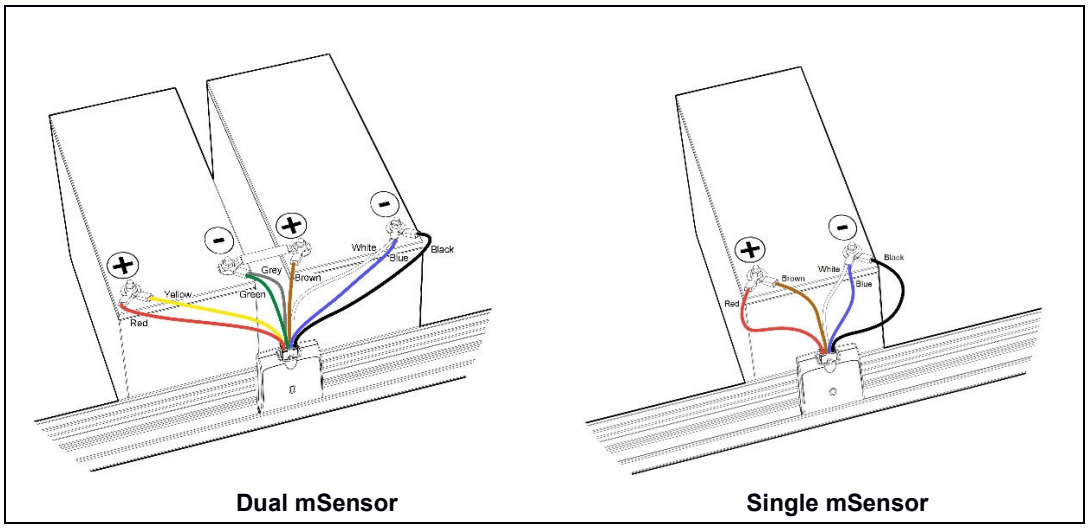

Dual mSensor **Single mSensor**

mSensor Power Leads without Block Temperature

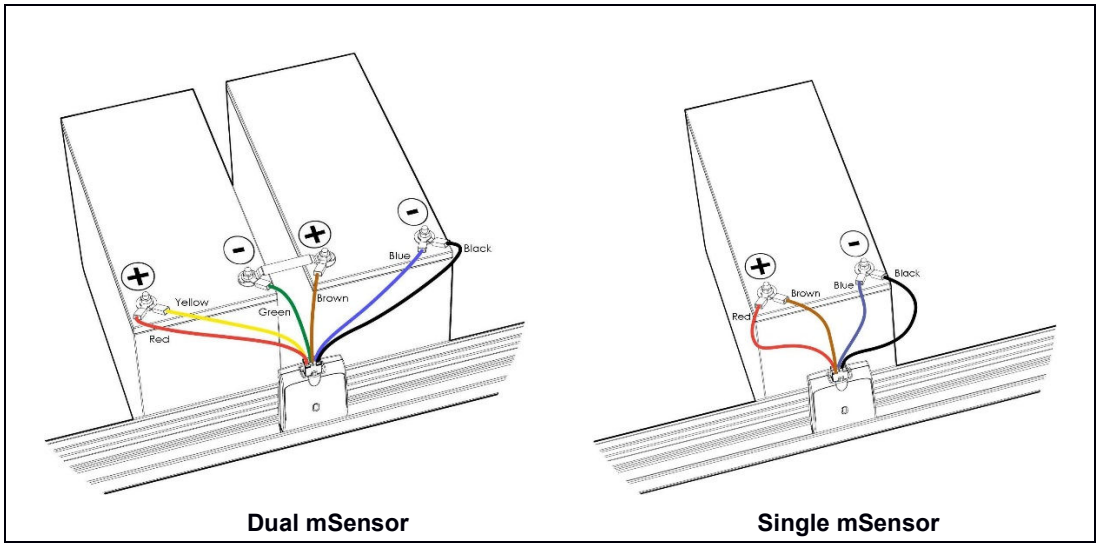

Dual mSensor **Single mSensor**

Appendix 7 – 4-Wire / Kelvin Connection

This article explains the 4-wire or Kelvin connection measurement technique in general terms. It is not intended as an in-depth guide to making high accuracy measurements of battery impedance.

Resistance

Resistance is commonly measured by passing a known test current through the resistance under test and measuring the corresponding voltage. The value of resistance is then determined from Ohms law:

$$R = V/I$$

where:
R = resistance
V= measured voltage
I = known test current

2-Wire Resistance Measurement

Simple meters measure resistance using 2 leads or probes. Internally, the meter generates a test current that is driven through the resistance under test while simultaneously measuring the voltage at the terminals of the meter. The diagram below illustrates this principle.

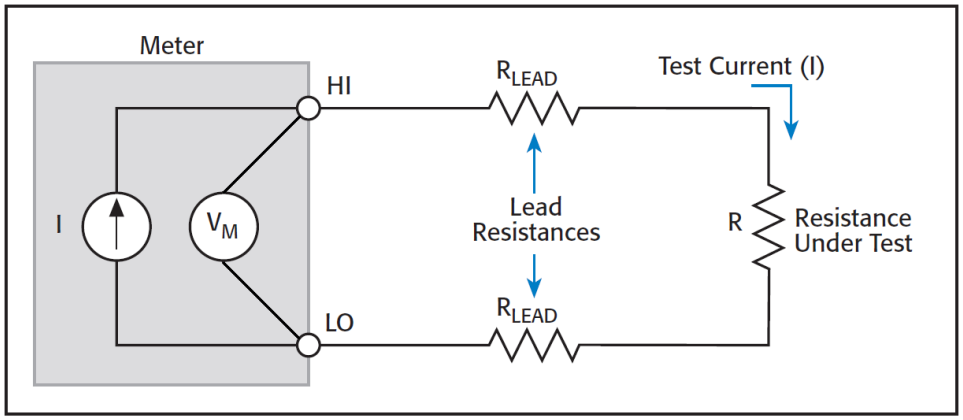

Note that the meter leads have resistance (denoted R_{Lead} above). The points of contact of the meter probes with the resistance under test also have resistance (denoted $R_{Contact}$, not shown above).

As the meter measures the voltage at its terminals, the voltage developed is due to the total of all resistances in the external circuit, i.e. R, R_{Lead} & $R_{Contact}$. If the lead and contact resistances are significant in value compared to the resistance under test, the lead and contact resistances result in the meter reporting a higher value for the resistance under test than its true value.

Example:
Typical meter probes can have resistances in the range 10mΩ to 50mΩ (a 1m length of 20AWG copper wire has a resistance of approx. 33mΩ). Contact resistance is usually comparable. If the total lead and contact resistance is 20mΩ and the true value of the resistance under test is also 20mΩ, the meter will report the resistance to be 40mΩ. Thus, the resistance measurement error is 20mΩ or 100% (20mΩ / 20mΩ).

NOTES:

- Some meters try to compensate for the lead and contact resistances using a *Null* or *Calibration* function. These functions require making a resistance measurement with either the tips of the probes shorted together or placed across a known, calibrated resistance or shunt. The measured value is then subtracted from subsequent measurements.
- Meters using the 2-wire method are generally only capable of measuring resistance to just under 1Ω with accuracy of about 50 to 100mΩ as they do not have adequate accuracy or resolution.

4-Wire/Kelvin Resistance Measurement

To reduce the effect of lead and contact resistances, the 4-wire or Kelvin connection method can be used. This method requires 4 wires and thus 4 terminals at the meter as shown below. With this configuration, the test current is driven through the resistance under test using one set of leads called the Source leads. The voltage developed across the resistance under test is measured by another set of leads called the Sense leads. The Sense leads should be connected as close as possible to the resistance under test for highest accuracy.

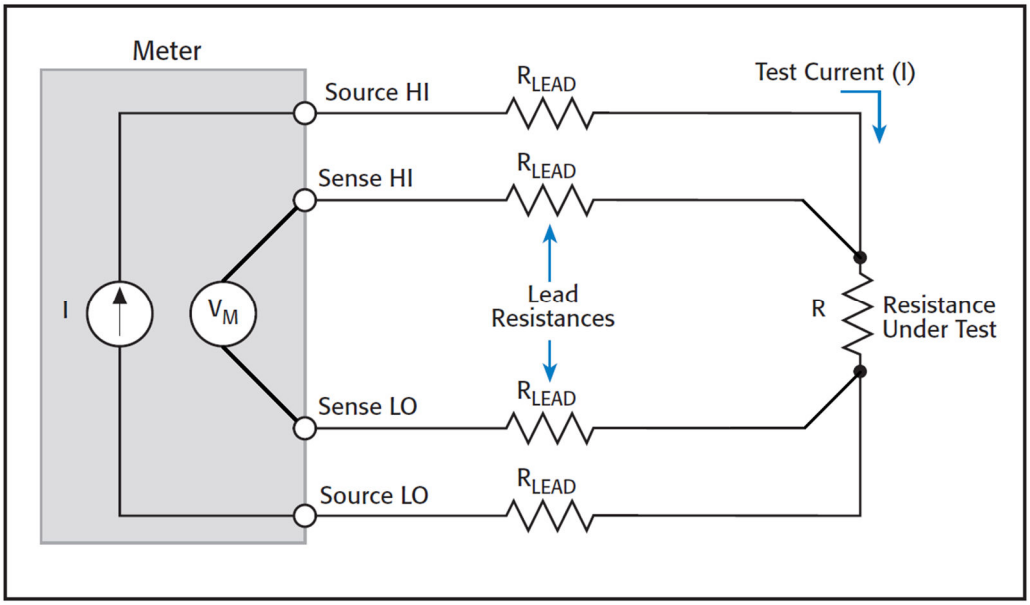

With this method, the test current does not flow in the Sense leads so there is no voltage developed across their resistance. In addition, as the Sense leads are connected directly at the resistance under test, the voltage developed by the test current flowing through the resistance of the Source leads is not measured. Thus, the meter only measures the voltage due the test current flowing through the resistance under test which results in a more accurate reading that is not influenced by the meter leads.

NOTES:

- A very small, negligible, current does flow in the Sense leads due to the input circuitry of the meter. As long as this current is much smaller than the test current, it does not significantly affect the resistance measurement and can be ignored.
- The method of physically connecting the leads at the resistance under test can affect the measurement. If there is any appreciable contact resistance at the resistance under test due to the physical position of the leads, this contact resistance can be measured by the meter and offset the true resistance measurement.

The internal resistance of batteries used with large UPS can range from less than 1mΩ for 2V batteries up to 20mΩ for 12V batteries so we can see that a 2-wire approach can result in a large measurement error if lead and contact resistance are not considered.

The 4-wire or Kelvin connection method is recognised as the most accurate way to measure resistance when high accuracy and/or low sample resistances are involved.

Appendix 8 – DC Model Controller Wiring

The DC model *PowerShield Controllers* are fitted with a male 3 way input socket and are supplied with a mating female screw terminal plug. The following points must be considered:

- The Controller must be installed by a service person and connected to a socket outlet or fixed wiring with a protective earth conductor or connector.
- A readily available disconnect device shall be incorporated in the building wiring or the socket outlet near the *PowerShield Controller* that is readily accessible.
- The power source for the *PowerShield Controller* must be fused with a circuit breaker of no greater than 20A rating. The connection must be installed in a service access area.

DC Model Plug

The plug required to connect to a DC model *PowerShield Controller* is a Wieland GST15i3 3-pole female screw terminal plug (Wieland part number 91.931.3053.1) as shown below. This plug is supplied with the *PowerShield Controller.*

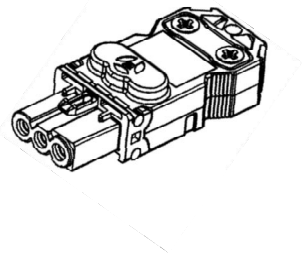

The plug specifications are shown below. It must be wired with cable of appropriate gauge and rating. We recommend using cable with minimum ratings of 5A 250V.

Parameter	Specification
Rated Voltage	250V
Rated Current	16A
Cable outer diameter	5.5mm to 9.0mm
Wire cross sectional area	0.5mm^2 to 1.5mm^2

The plug is fitted with a latch to secure it to the input socket of the *PowerShield Controller*. To remove the plug, press down on the latch with a screwdriver or suitable tool and pull the plug out.

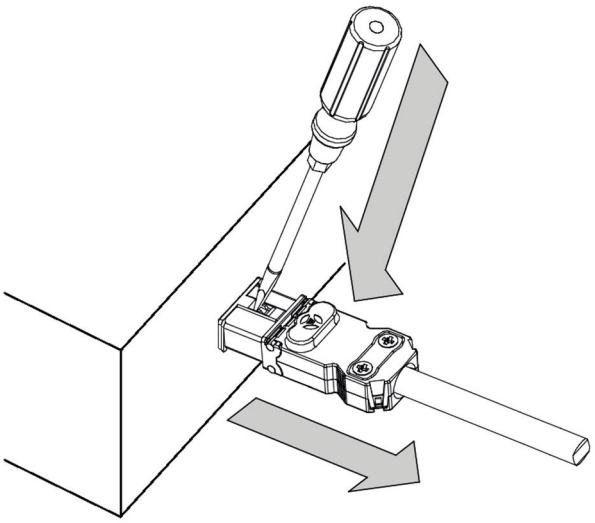

To wire and assemble the plug, please complete the following steps:

1. Remove the outer cable sheath and strip the ends of each wire as per below (lengths are in mm):

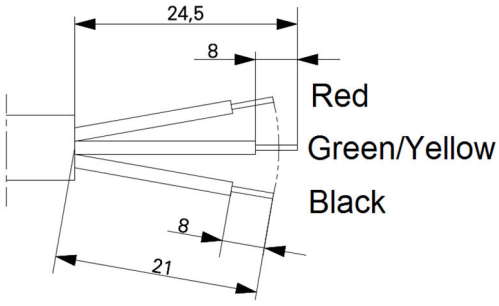

2. Insert the wires into the plug and tighten the contact screws.
   The wiring should be as follows:

Plug Terminal	Wire / Function
Live	Red / DC supply positive
Earth	Earth
Neutral	Black / DC supply negative

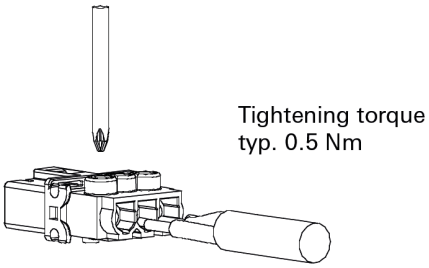

3. Fit the covers.

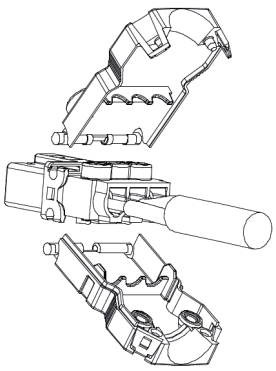

4. Tighten the strain relief screws.

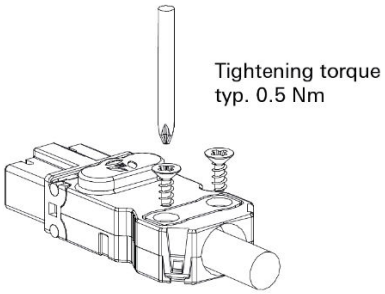

Appendix 9 – Controller Specifications

Configuration Interface	Web browser
Communication	
Front	1000Base-T Ethernet (Service Port) USB (Flash drive only) LCD
Rear	1000Base-T Ethernet (*PowerShield Link* software, Modbus TCP, SNMP) RS485 (optional)
Hub Ports	8
Capacity	1 *PowerShield Hub* and up to 32 *PowerShield mSensors*
Connection	RJ45 / CAT5 cable
Maximum Distance	50m / 165ft (between *Controller* and *Hub*)
Memory	2GB RAM 4GB Flash
Relays	4
Type	Single Pole Double Throw (SPDT)
Rating	1A @ 30VDC, resistive
Auxiliary Inputs	2
Type	Voltage Free / Dry Contact
Physical Dimensions	1U High 19” rack mount enclosure, mild steel with powder coat finish Width: 430mm / 16.9 inches Depth: 265mm / 10.4 inches Height: 45mm / 1.8 inches Weight: 3kg / 6.6lbs *The Controller must be installed in a location that allows 30mm space at the top and sides of the unit for adequate air circulation.* *Installation must allow unrestricted airflow.*
Power Supply	AC Model: 90V to 260Vac, 50/60Hz, 0.42A max. 24V DC Model: 18V to 30Vdc, 1.1A max. 48V DC Model: 35V to 60Vdc, 0.52A max. 110V DC Model: 80V to 150Vdc, 0.22A max.
Power Consumption	Typical 5W + 1.6W per Hub Max. 6W + 1.8W per Hub
Environment	Indoor use only, Overvoltage Category II, Pollution Degree 2 Operating Temperature: 0°C to 50°C / 32F to 122F Storage Temperature: 0°C to 70°C / 32F to 158F Altitude: 2000m max.

Specifications subject to change.

Appendix 10 – Hub Specifications

Block Inputs	up to 64 (via dual *PowerShield mSensors*)
Type	*PowerShield mSensor*
Current Inputs	1 (provides string DC & AC current)
Type	Hall Effect
Range	0A to ±2000A (depends on Current Transducer model used)
Maximum Distance	3m / 10ft
Temperature Inputs	2
Type	Thermistor
Range	-10°C to 80°C / 14F to 176F
Maximum Distance	15m / 50ft
Auxiliary Inputs	2
Type	Voltage Free / Dry Contact
Humidity	1
Type	On-board sensor
Range	0% to 100% Relative Humidity
Communication Interface	
Connection	RJ45 / CAT5 cable
Type	Proprietary differential bus
Protocol	Modbus
Maximum Distance	25m / 82ft (total length of wiring from *Hub* to last *mSensor*)
Physical Dimensions	Width: 120mm / 4.7 inches Depth: 107mm / 4.2 inches Height: 25mm / 1.0 inch Weight: 177g / 0.4lbs
Power Supply	24V DC via *PowerShield Controller* hub port
Environment	Indoor use only, Overvoltage Category II, Pollution Degree 2 Operating Temperature: -10°C to 50°C / 14F to 122F Storage Temperature: -10°C to 80°C / 14F to 176F Altitude: 2000m max.

Specifications subject to change

Appendix 11 – mSensor Specifications

Block Inputs	1 or 2 (depends if using a single or dual *mSensor*)			
Block Type	1.2V NiCad, 2V, 4V, 6V, 8V, 12V, 16V Lead Acid			
Nominal Voltage[1]	**NiCad**	**2V**	**6V**	**12V**
Voltage Range	0.8 – 1.9V	1.6 – 2.6V	4.8 – 7.8V	9.6 – 15.6V
Voltage Resolution	1mV dc, 1mV ac	1mV dc, 1mV ac	5mV dc, 1mV ac	5mV dc, 1mV ac
Voltage Accuracy	±0.3%	±0.3%	±0.2%	±0.2%
Ohmic Range[2]	0.1 – 5mΩ	0.1 – 5mΩ	0.5 – 20mΩ	1.0 – 40mΩ
Ohmic Resolution	1uΩ	1uΩ	1uΩ	1uΩ
Ohmic Accuracy	±2.5% + ±15uΩ	±2.5% + ±15uΩ	±2.5% + ±25uΩ	±2.5% + ±25uΩ
Maximum Input	±5V	±6V	±25V	±65V
Temperature Inputs	1 per Block			
Type	Thermistor, located on Negative Terminal of Block			
Range	-10°C to 70°C / 14F to 158F			
Accuracy[3] / Resolution	±1°C, 0.1°C			
Maximum Distance	15m / 50ft			
Communication Interface				
Connection	4P4C Modular Jack / 4-core flat modular cable			
Type	Proprietary differential bus			
Protocol	Modbus			
Maximum Distance	25m / 82ft (total length of wiring from *Hub* to last *mSensor*)			
Isolation	UL certified to 600V DC (internal optical isolation)			
Physical Dimensions	Width: 106mm / 4.2 inches Depth: 75mm / 3.0 inches Height: 25mm / 1.0 inch Weight: 161g / 0.4lbs			
Power Supply	**NiCad**	**2V**	**6V**	**12V**
Nominal Supply Current[4]	50mA	30mA	18mA	18mA
Environment	Indoor use only, Overvoltage Category 0, Pollution Degree 2 Operating Temperature: 0°C to 50°C / 32F to 122F Storage Temperature: -10°C to 70°C / 14F to 158F Altitude: 2000m max.			

Specifications subject to change.

1. Most common models. Other models available on request.
2. NiCad single *mSensor* cannot perform ohmic measurement.
3. Over the range 0°C - 50°C.
4. From block(s) being monitored.

Appendix 12 - PowerShield 8 Installation Forms

6300-107 Facility Information Form (FIF)

Facility Information

Company/Customer:	
Facility Name:	
Facility Address:	
Total Number Strings:	
Total Number PowerShield 8 Systems:	
Installed by:	
Date:	

Notes

6300-108 PowerShield 8 Controller Information Form (CIF)

PRINT OUT AS MANY COPIES OF THIS FORM AS REQUIRED

Facility Name: .....

Controller Details

System Name:	
Strings:	**No. Monitored:** **Details (No. Blocks/Voltage):**
Port 1:	**Connected (Yes / No):** **Configuration (DHCP / Manual):** **Manual Config.:** • **Address:** • **Subnet Mask:** • **Gateway:**
Port 2:	**Installed (Yes / No):** **Interface Type (RS485, RS232):** **Baud Rate:**
Port 3:	**Installed (Yes / No):** **Interface Type (RS485, RS232):** **Baud Rate:**
Relays:	**#1 Function:** **#2 Function:** **#3 Function:** **#4 Function:**
Auxiliary Inputs:	**#1 Function:** **#2 Function:**

Notes

6300-109 PowerShield 8 String Information Form (SIF)

PRINT OUT AS MANY COPIES OF THIS FORM AS REQUIRED

Facility Name: .....

PowerShield 8 System Name: .....

String # / Name:									
No. mSensors (Singles / Duals):									
Block Details				Hub Details					
Block Start #	Block End #	Block Voltage	Block Ah Rating	Hub ID	Controller Port #	CT Model	CT Direction	Temp. Sensors	Temp. Sensor Location

String # / Name:									
No. mSensors (Singles / Duals):									
Block Details				Hub Details					
Block Start #	Block End #	Block Voltage	Block Ah Rating	Hub ID	Controller Port #	CT Model	CT Direction	Temp. Sensors	Temp. Sensor Location

String # / Name:									
No. mSensors (Singles / Duals):									
Block Details				Hub Details					
Block Start #	Block End #	Block Voltage	Block Ah Rating	Hub ID	Controller Port #	CT Model	CT Direction	Temp. Sensors	Temp. Sensor Location

String # / Name:									
No. mSensors (Singles / Duals):									
Block Details				Hub Details					
Block Start #	Block End #	Block Voltage	Block Ah Rating	Hub ID	Controller Port #	CT Model	CT Direction	Temp. Sensors	Temp. Sensor Location

Example

String # / Name:	1 / UPS A1								
No. mSensors (Singles / Duals):	0 / 20								
Block Details				Hub Details					
Block Start #	Block End #	Block Voltage	Block Ah Rating	Hub ID	Controller Port #	CT Model	CT Direction	Temp. Sensors	Temp. Sensor Location
1	40	12V	150Ah	221	1	L34S800D15	Standard	2	1 = Top 2 = Bottom

6300-110 PowerShield 8 Block Mapping Form (BMF)

PRINT OUT AS MANY COPIES OF THIS FORM AS REQUIRED

Facility Name: ....

PowerShield 8 System Name: ....

String # / Name:	
Controller Port # / Hub ID:	
Reverse Block Numbering (Yes/No):	

Block #	mSensor ID	Block #	mSensor ID	Block #	mSensor ID	Block #	mSensor ID

Example

String # / Name:	1 / UPS A1
Controller Port # / Hub ID:	1 / 221
Reverse Block Numbering (Yes/No):	No

Block #	mSensor ID	Block #	mSensor ID	Block #	mSensor ID	Block #	mSensor ID
1	1	5	3	9	5	13	7
2		6		10		14	
3	2	7	4	11	6	15	8
4		8		12		16	