TRINITY

USER GUIDE V1.0

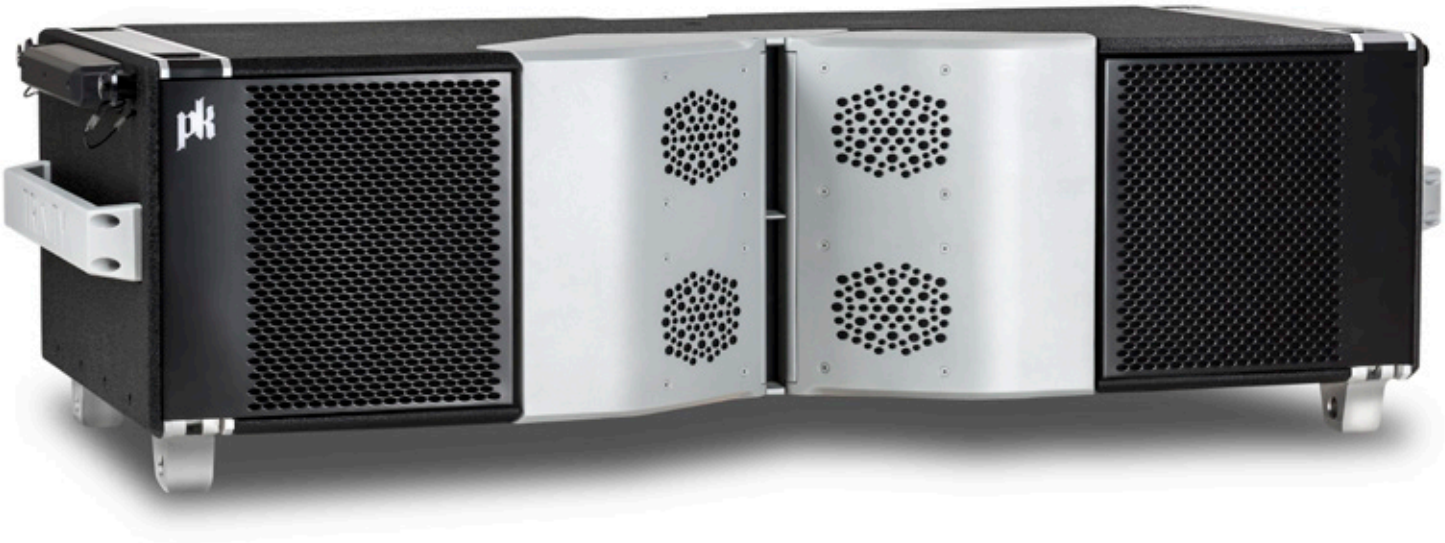

CANADIAN OFFICE • 403.452.6004
BAY 133 – 2634 45 Ave SE, Calgary Alberta, T2B 3M1

WWW.PKSOUND.CA

US OFFICE • 650.871.2414
2919 WHIPPLE RD. UNION CITY CA, USA. 94587

Table of Contents

1. Important Safety Instructions

1. Read all instructions thoroughly and keep this manual close at hand.
2. Do not use this module near water.
3. Clean only with dry cloth.
4. Do not block any ventilation openings. Install in accordance with the manufacturer's instructions and local authority having jurisdiction.
5. Do not install near any heat sources such as radiators, heat registers, stoves, or other apparatus (including amplifiers) that produce heat.
6. Use a proper polarized or grounding-type plug. If the provided plug does not fit into your outlet, consult an electrician.
7. Protect the power cord from being walked on or pinched particularly at plugs, convenience receptacles, and the point where they exit from the apparatus.
8. Only use attachments/accessories specified by the manufacturer.
9. Use only with the cart, stand, tripod, bracket, or table specified by the manufacturer, or sold with the module. When a cart is used, use caution when moving the cart/module combination to avoid injury from tip-over.
10. Unplug this module during lightning storms or when unused for long periods of time.
11. Refer all servicing to qualified service personnel. Servicing is required when the apparatus has been damaged in any way, such as power-supply cord or plug is damaged, liquid has been spilled or objects have fallen into the apparatus, the apparatus has been exposed to rain or moisture, does not operate normally or has been dropped.
12. The means of disconnection from the live power source is the chassis power connector or main plug. One of these devices must remain accessible when the apparatus is in use.

CAUTION: Failure to follow the instructions in their entirety could result in serious injury or death. Follow all local safety practices and due diligence in ensuring safe working conditions while using Trinity.

CAUTION: Do not remove the amplifier or actuator assemblies. No user-serviceable parts inside. Refer servicing to qualified service personnel.
Email **support@pksound.ca** for service.

CANADIAN OFFICE • 403.452.6004
BAY 133 – 2634 45 AVE SE, CALGARY ALBERTA, T2B 3M1

WWW.PKSOUND.CA

US OFFICE • 650.871.2414
2919 WHIPPLE RD. UNION CITY CA, USA. 94587

2. Additional Power Safety Instructions

1. The unit must be powered exclusively by an earth connected mains socket in an electrical network compliant to IEC 364 or similar local rules. It is absolutely vital that the user verifies this fundamental safety requirement. If you are in any doubt, get the installation checked by qualified personnel before use.
2. The means of disconnection from the mains is the mains plug. We strongly recommend that you power the unit from a professionally installed mains supply with an easily accessible on/off switch or circuit breaker.
3. Trinity is equipped with a universal power supply capable of operating within the following parameters:
    - 100 – 240 V, 50 – 60 Hz
4. Before powering the unit via the Neutrik® PowerCON TRUE1 connector, make sure that the unit is supplied with the correct mains operating voltage:
    - 100 – 240 V, 50 – 60 Hz
5. The power section is protected by three non-user serviceable fuses:
    - T10AH250V (power amplifier)
    - 2 x T10AH250V (aux power supply)
6. Do not energize this unit if the electrical power cord is frayed or broken, or the mains plug has exposed inner connectors.
7. Do not block or restrict air flow from the front or rear of the module, doing so will negatively impact performance of the unit.

WARNING: To reduce the risk of fire or electric shock, do not expose this apparatus to rain or moisture.

WARNING: Never spray water directly into the front of the module, doing so will expose electronic components to moisture and damage the internal equipment.

CANADIAN OFFICE • 403.452.6004
BAY 133 – 2634 45 AVE SE, CALGARY ALBERTA, T2B 3M1

WWW.PKSOUND.CA

US OFFICE • 650.871.2414
2919 WHIPPLE RD. UNION CITY CA, USA. 94587

3. Approvals

3.1 Safety:

- UL60065:2003
- CSA C22.2 60065:03:2000
- IEC 60065 + AM1:2005 & AM2:2010

3.2 Environmental:

- IP43: when suspended <=0 degrees inclination (level or downward angle)
- IP42: when suspended >=0 degrees inclination (any upward angle)
- FCC: CFR47 Part 15B-2010 / FCC/ICES-003
- Country of Origin: Canada
- This is a Class A product: In a domestic environment this product may cause radio interference in which case the user may be required to take adequate measures

NOTE: This equipment has been tested and found to comply with the limits for a Class A digital device, pursuant to part 15 of the FCC Rules. These limits are designed to provide reasonable protection against harmful interference when the equipment is operated in a commercial environment. This equipment generates, uses, and can radiate radio frequency energy and, if not installed and used in accordance with the instruction manual, may cause harmful interference to radio communications. Operation of this equipment in a residential area is likely to cause harmful interference in which case the user will be required to correct the interference at his own expense.

CANADIAN OFFICE • 403.452.6004
BAY 133 – 2634 45 AVE SE, CALGARY ALBERTA, T2B 3M1

WWW.PKSOUND.CA

US OFFICE • 650.871.2414
2919 WHIPPLE RD. UNION CITY CA, USA. 94587

4. Power Requirements

4.1 Voltage and Current Requirements

- Trinity is equipped with a universal power supply and operates safely and continuously when its AC voltage stays within 100–240 VAC at 50 or 60 Hz. The loud-speaker allows any combination of voltage to ground (neutral-line-ground or line-line-ground). If the voltage rises above 275 V, the power supply could become damaged.
- When Trinity modules are powered from a three phase power source it is very important to keep a good balance in the load of each phase of the AC power. Always be sure to include all devices connected to the same mains power supply when calculating the power requirement of the system.

CAUTION: To ensure that Trinity performs as specified, without interruption, and without damage to its power supply ensure that: The power source is operating within the required voltage window (100–240 VAC). Use the proper length and gauge power cables and ensure system voltage drop does not exceed 5% of the originally supplied voltage.

4.2 AC Input connector

- Each Trinity module is provided with a Neutrik powerCON TRUE1 NAC3PX inlet-outlet to supply power and daisy chain over to other modules. The NAC3PX is rated for 16A. The maximum number of modules possible to daisy chain is:
    - 240V 4 Modules
    - 208V 4 Modules
    - 120V 2 Modules

The Neutrik powerCON TRUE1 connector is rated at IP65 when mated. Unmated connections should be considered IP20.

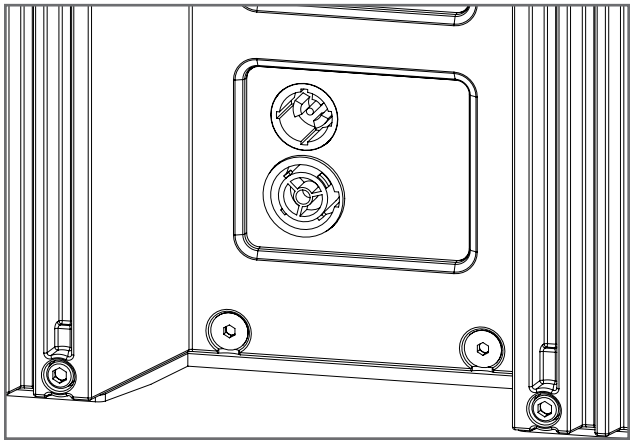

CANADIAN OFFICE • 403.452.6004
BAY 133 – 2634 45 AVE SE, CALGARY ALBERTA, T2B 3M1

WWW.PKSOUND.CA

US OFFICE • 650.871.2414
2919 WHIPPLE RD. UNION CITY CA, USA. 94587

5. Electrical Safety

Pay close attention to these important electrical and safety guidelines.

1. Trinity requires a grounded outlet. Always use a grounded outlet and plug.
2. Do not use a ground-lifting adapter or cut the AC cable ground pin.
3. Make sure the AC power cable for the module has the appropriate power plug (on the other end) for the area in which you will operate the loudspeaker.
4. Do not operate the module if the power cable is frayed, broken or has exposed inner conductors.
5. Keep all liquids away from Trinity modules and exposed, unrated connections to avoid hazards from electrical shock

6. Environmental Constraints

1. Never spray water directly into the front of the module, doing so will expose electronic components to moisture and damage the internal equipment.
2. Never disconnect, attach or interconnect cables when the cable or module is wet. In the event that the module becomes wet, the user must ensure all power has been removed prior to disconnecting or reconnecting.

NOTE: For any permanent installation, the user must consult the manufacturer at: **support@pksound.ca**

CANADIAN OFFICE • 403.452.6004
BAY 133 – 2634 45 AVE SE, CALGARY ALBERTA, T2B 3M1
WWW.PKSOUND.CA
US OFFICE • 650.871.2414
2919 WHIPPLE RD. UNION CITY CA, USA. 94587

7. Rigging

7.1 Rigging Overview

Trinity's AUTO-ALIGN rigging is very simple and designed specifically to reduce setup time and improve the safety of workers. Trinity modules are flown straight and only curved after the array has been suspended. Trinity's rigging system consists of the following elements:

7.2 Rigging components incorporated into the Trinity module

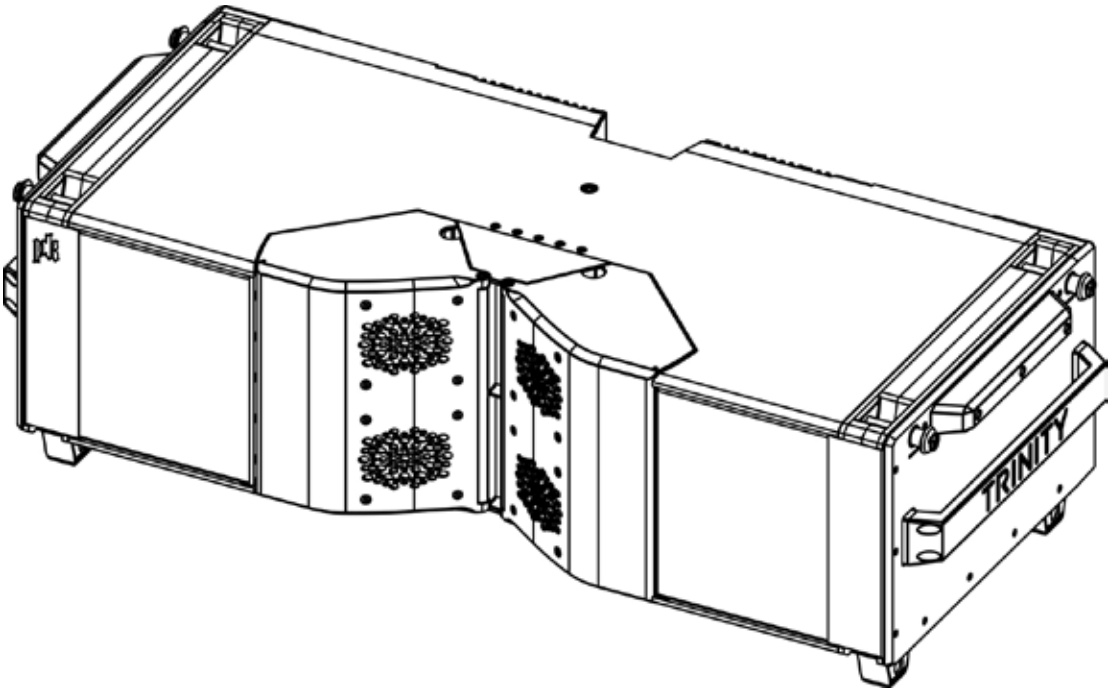

CANADIAN OFFICE • 403.452.6004
BAY 133 – 2634 45 AVE SE, CALGARY ALBERTA, T2B 3M1

WWW.PKSOUND.CA

US OFFICE • 650.871.2414
2919 WHIPPLE RD. UNION CITY CA, USA. 94587

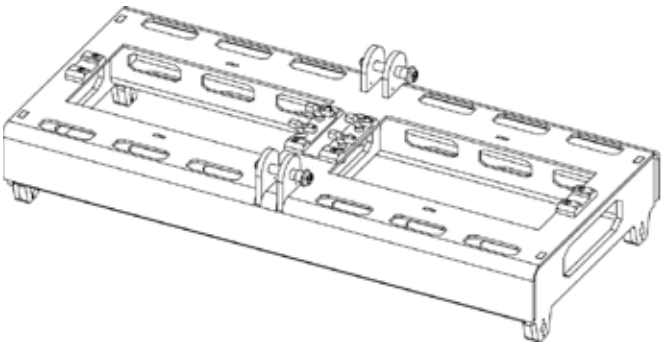

Trinity Fly Bar-Lifting Frame Assembly [TFB-LFA]

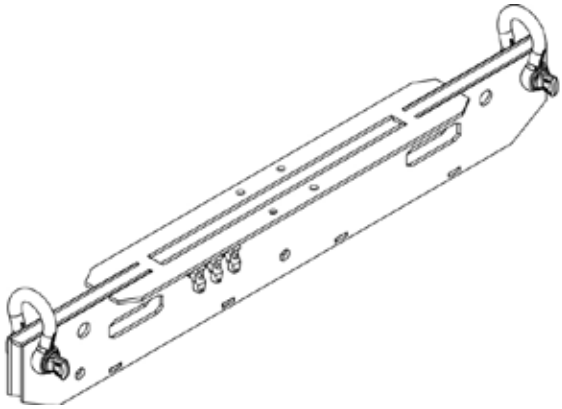

Trinity Fly Bar-Arm [TFB-ARM]

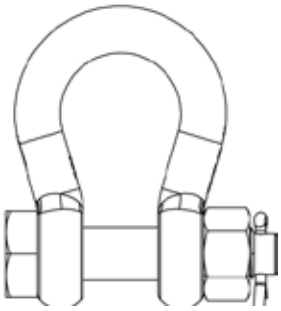

6 Ton 7/8th Shackle

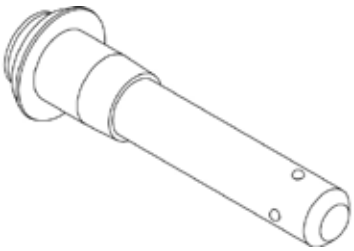

19mm Ball Locking Pins

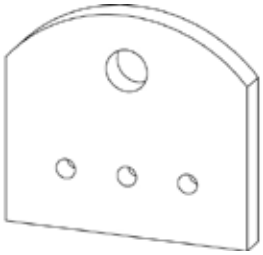

Single Point Adaptor [SPA]

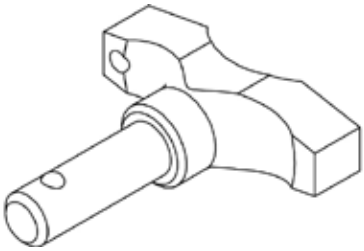

12mm x 25mm Ball Locking Pins

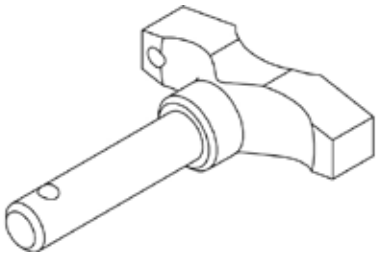

12mm x 40mm Ball Locking Pins

CAUTION: Use only the quick release pins supplied with Trinity or the exact replacement part from PK Sound. Failure to do so will compromise the integrity of the system.
CAUTION: Use only mounting and rigging hardware that has been rated to meet or exceed the total weight of the system being hung, and meets local laws/regulations.

CANADIAN OFFICE • 403.452.6004
BAY 133 – 2634 45 AVE SE, CALGARY ALBERTA, T2B 3M1

WWW.PKSOUND.CA

US OFFICE • 650.871.2414
2919 WHIPPLE RD. UNION CITY CA, USA. 94587

7.3 Mechanical Limits

The Trinity rigging system complies with UL-60065 and has been designed following the guidelines of BGV-C1. Refer to Kontrol for the safety factor of a specific deployment.

The safe limit gives the maximum number of elements for which the safety factor is always compliant with UL-60065, regardless of the other deployment parameters (fly bar angles, inter-module spacing, etc.)

The “maximum limit” and “limited position” columns detail the maximum number of modules for which the safety factor can be compliant with UL-60065. The “safe limit” and “any configuration” columns detail the deployment parameters that provide the best mechanical conditions.

Ground Stacked	Safe Limit	Maximum Limit
Trinity Cart with Outriggers	6	6
Flown	**Any Configuration**	**Limited Position**
Trinity Fly Bar 2 Points	16	24
Trinity Fly Bar 2 Points Reversed	16	24
Trinity Fly Bar Single Point	16	16

WARNING: Local regulations in some countries require higher safety factors and specific rigging approvals. It is the user’s responsibility to ensure that any overhead suspension of PK Sound systems has been made in accordance with all applicable local regulations.

CANADIAN OFFICE • 403.452.6004
BAY 133 – 2634 45 AVE SE, CALGARY ALBERTA, T2B 3M1

WWW.PKSOUND.CA

US OFFICE • 650.871.2414
2919 WHIPPLE RD. UNION CITY CA, USA. 94587

7.4 Assessing Mechanical Safety

Rated working load limit (WLL) is not enough

The rated WLL is an indication of the module resistance to tensile stress. For complex mechanical systems such as loudspeaker arrays, WLLs cannot necessarily be used to determine the maximum number of enclosures within an array or to assess the safety of a specific array configuration.

Mechanical modeling with KONTROL

The working load applied to each linking point, along with the corresponding safety factor, will depend on numerous variables linked to the composition of the array (type and number of enclosures, splay angles) and the implementation of the flying or stacking structure (number and location of flying points, site angle). This cannot be determined without the complex mechanical modeling and calculation offered by KONTROL.

Assessing the safety with KONTROL

The overall safety factor of a specific mechanical configuration always corresponds to the lowest safety factor among all the linking points. Always model the system configuration with the KONTROL software and check the Mechanical Data section to identify the weakest link and its corresponding working load. By default, a stress warning will appear when the mechanical safety goes beyond the recommended safety level.

Safety of ground-stacked arrays in KONTROL

For ground-stacked arrays, a distinct stability warning is implemented in KONTROL. It indicates a tipping hazard when the array is not secured to the ground, stage or platform. It is user responsibility to secure the array and to ignore this warning.

Consideration must be given to unusual conditions

KONTROL calculations are based on typical environmental conditions. A higher safety factor is recommended with factors such as extreme high or low temperatures, strong wind, prolonged exposure to salt water, etc. Always consult a rigging specialist or local authority having jurisdiction to implement safety practices adapted to such situations.

7.5 Kontrol and mechanical safety

To deploy more elements than the safe limits, always model the system in Kontrol before installation, and check the Mechanical Data section for any stress warning or stability warning.

CANADIAN OFFICE • 403.452.6004
BAY 133 – 2634 45 AVE SE, CALGARY ALBERTA, T2B 3M1
WWW.PKSOUND.CA
US OFFICE • 650.871.2414
2919 WHIPPLE RD. UNION CITY CA, USA. 94587

7.6 Storing and Mounting the Trinity Fly Bar-Lifting Frame Assembly [TFB-LFA]

The TFB-LFA can be stored and transported on a stack of 4 Trinity modules on a Trinity Cart.

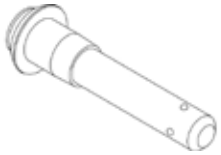

19mm Ball Locking Pins

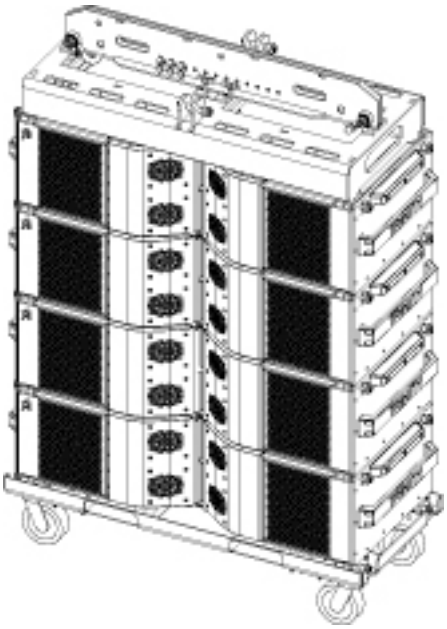

To mount the TFB-LFA-LFA remove the 4 x 19mm BLPs from the top module and simply place the TFB-LFA atop the module and reinsert the 4 x 19mm BLPs.

The symmetrical design of the TFB-LFA and the Auto-Align nature of the rigging ensures that the TFB-LFA will fit regardless of orientation. ALWAYS double check the BLPs for a positive lock by doing a pull test with no button decompression on the BLP.

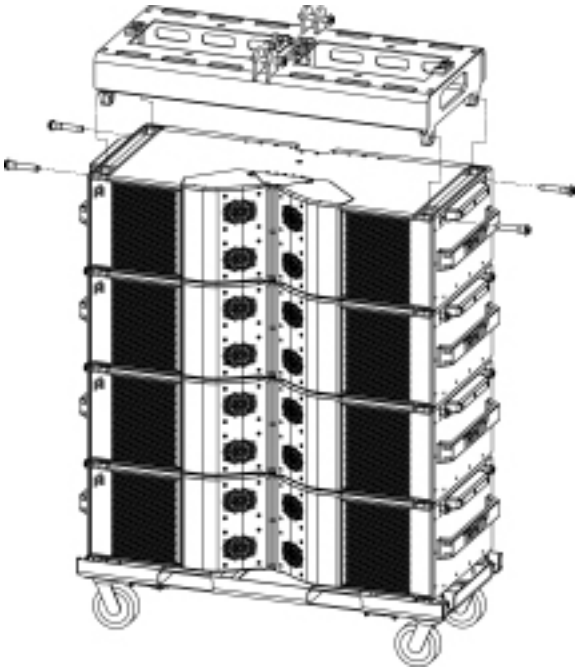

CANADIAN OFFICE • 403.452.6004
BAY 133 – 2634 45 AVE SE, CALGARY ALBERTA, T2B 3M1

WWW.PKSOUND.CA

US OFFICE • 650.871.2414
2919 WHIPPLE RD. UNION CITY CA, USA. 94587

7.7 Storing the Trinity Fly Bar-Arm [TFB-ARM]

The TFB-ARM can be stored and transported atop the TFB-LFA. To store the TFB-ARM:

1. Remove the 4 x 12mmx25mm BLPs from the TFB-LFA.
2. Place the TFB-ARM atop the TFB-LFA and reinsert the 4 x 12mmx25mm BLPs thru the holes in the TFB-ARM and TFB-LFA.

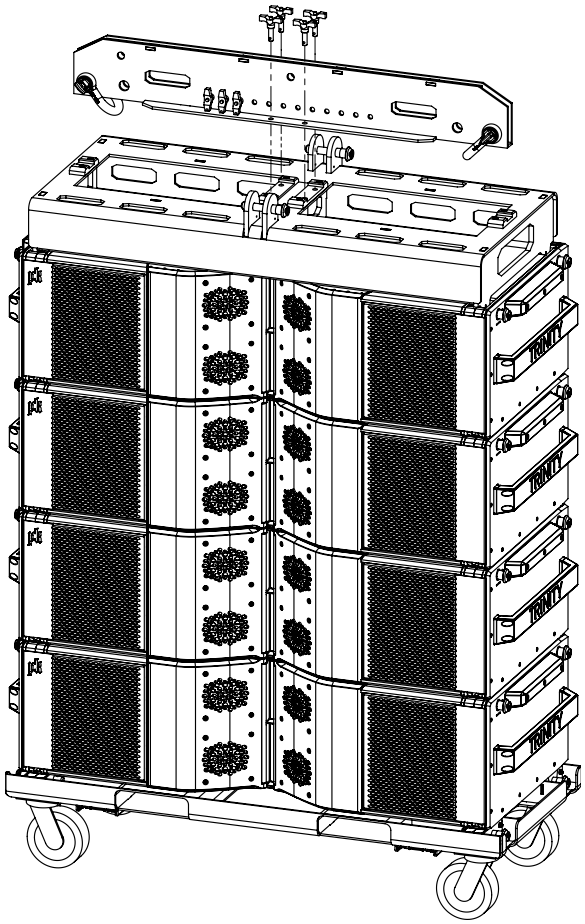

CANADIAN OFFICE • 403.452.6004
BAY 133 – 2634 45 AVE SE, CALGARY ALBERTA, T2B 3M1

WWW.PKSOUND.CA

US OFFICE • 650.871.2414
2919 WHIPPLE RD. UNION CITY CA, USA. 94587

7.8 Mounting the TFB-ARM for use

The TFB-ARM can be mounted in 2 orientations. “Forward” for most dual point hangs and all single point hangs as well as “Reversed” for 2 point hangs requiring additional upward angles of the upper modules.

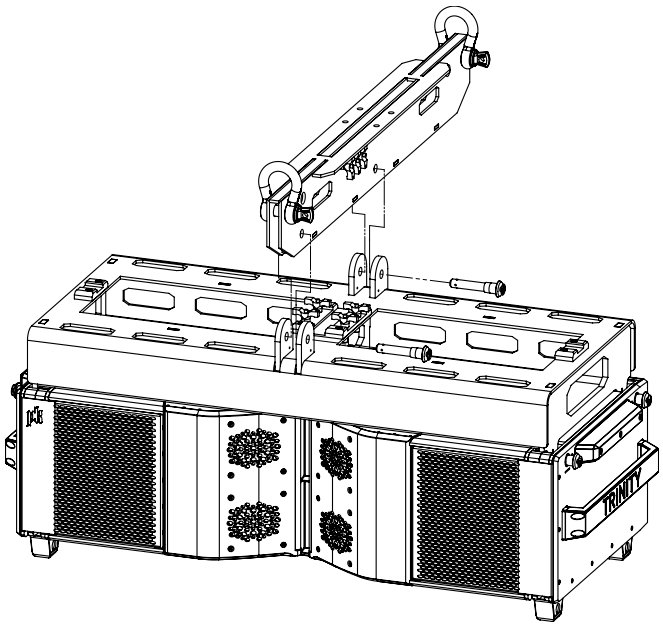

7.9 Forward Mounting Instructions

1. To mount the TFB-ARM “Forward” remove the TFB-ARM from its storage position and store the 4 x 12mmx40mm BLPs back in the TFB-LFA.
2. Remove the 2 x 19mm BLPs from the TFB-LFA.
3. Place the TFB-ARM between the 4 protruding tabs of the TFB-LFA with the TFB-ARM overhanging the rear of the Trinity module.
4. Reinsert the 2 x 19mm BLPs thru the TFF-LFA Tabs and the TFB-ARM
5. ALWAYS double check the BLPs for a positive lock.
6. Kontrol will notify users with an alert if any weight limitations have been exceeded.

CANADIAN OFFICE • 403.452.6004
BAY 133 – 2634 45 AVE SE, CALGARY ALBERTA, T2B 3M1
WWW.PKSOUND.CA
US OFFICE • 650.871.2414
2919 WHIPPLE RD. UNION CITY CA, USA. 94587

7.10 Reverse Mounting Instructions

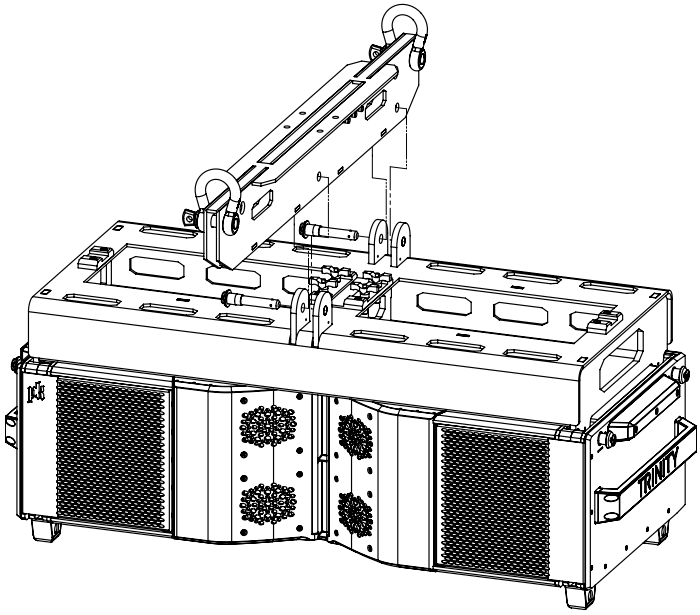

1. To mount the TFB-ARM "Reversed" remove the TFB-ARM from its storage position and store the 4 x 12mmx40mm BLPs back in the TFB-LFA.
2. Remove the 2 x 19mm BLPs from the TFB-LFA.
3. Place the TFB-ARM between the 4 protruding tabs of the TFB-LFA with the TFB-ARM overhanging in front-top side of the Trinity module.
4. Reinsert the 2 x 19mm BLPs thru the TFF-LFA Tabs and the TFB-ARM.
5. ALWAYS double check the BLPs for a positive lock by pull testing with no button decompression.

7.11 **Connecting Hoists, Safety Lines and Dead Hangs:**

The TFB-ARM is supplied with 2 permanently installed 7/8" shackles. Primary supporting lines must be connected to these shackles when using 2 point hangs. The TFB-ARM is also equipped with holes for 2 secondary 7/8" shackles. (Shackles not

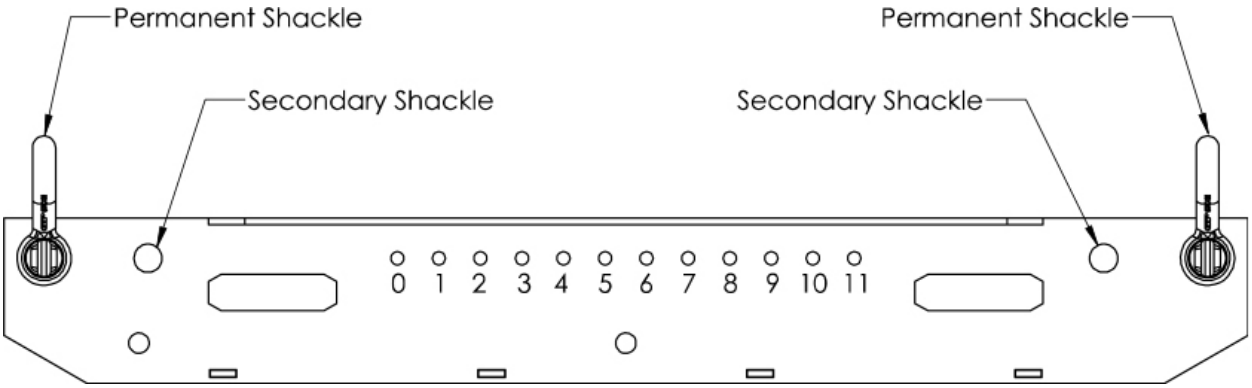

CANADIAN OFFICE • 403.452.6004
BAY 133 – 2634 45 AVE SE, CALGARY ALBERTA, T2B 3M1
WWW.PKSOUND.CA
US OFFICE • 650.871.2414
2919 WHIPPLE RD. UNION CITY CA, USA. 94587

- When chain hoists are used as the primary supporting means connect the hoists to the permanent shackles.
- When situations require a “Dead Hang” connect the supporting lines from the “Dead Hang” to the permanent shackles and connect the chain hoists to be used for lifting to the Secondary 7/8” Shackles (shackles not provided). DO NOT set/ change inter-module spacings while the array is supported by the secondary shackles.
- The secondary shackles can also be used as connection points for safety lines.
- Single Point Adaptor: For added flexibility in hanging Trinity the TFB-ARM is supplied with a Single Point Adaptor [SPA].

Delta plate instructions

1. After verifying the desired configuration with Kontrol mount the TFB-ARM in the “Forward” position (see section 7.9) following the instructions above.
2. Remove the 3 x 12mmx40mm BLPs from the TFB-ARM and remove the SPA from its storage position.
3. Install a 7/8” shackle through the large hole in the SPA.

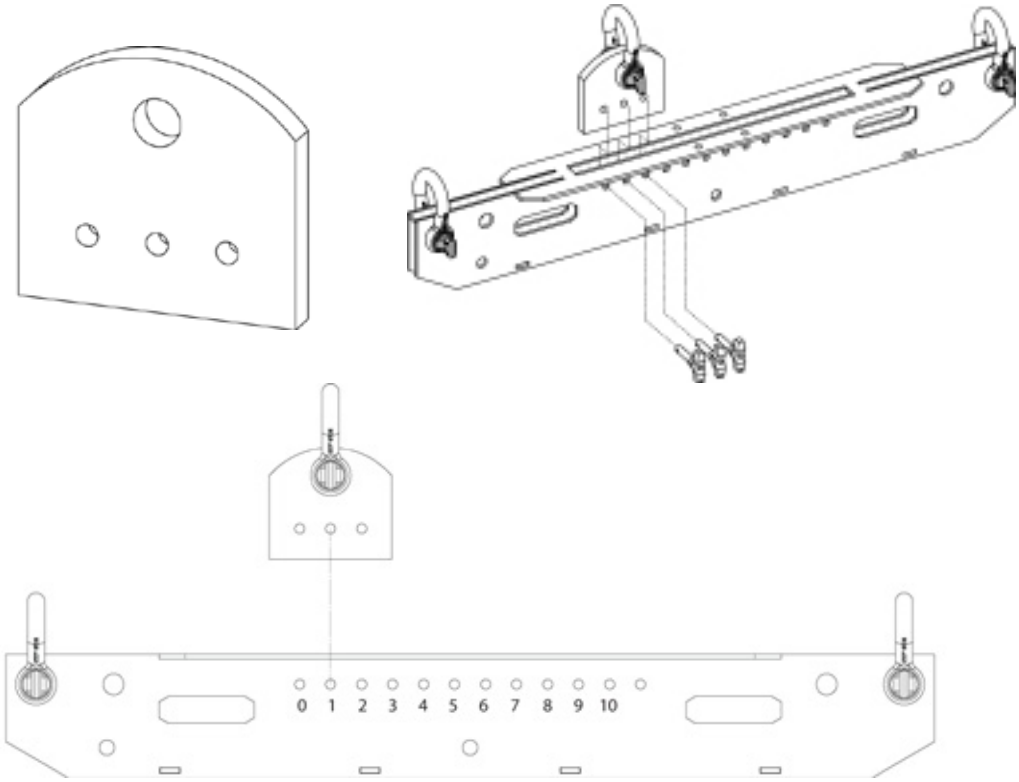

WARNING: Although it is possible to safely hang up to 16 modules using the SPA in just about any configuration not all configurations are physically possible to achieve. Thus it is always necessary to verify the desired configuration of the line array hang with Kontrol before flying the array when using the SPA.

CANADIAN OFFICE • 403.452.6004
BAY 133 – 2634 45 AVE SE, CALGARY ALBERTA, T2B 3M1
WWW.PKSOUND.CA
US OFFICE • 650.871.2414
2919 WHIPPLE RD. UNION CITY CA, USA. 94587

4. Align the middle hole of the SPA with the lug position prescribed by Kontrol for the desired configuration.

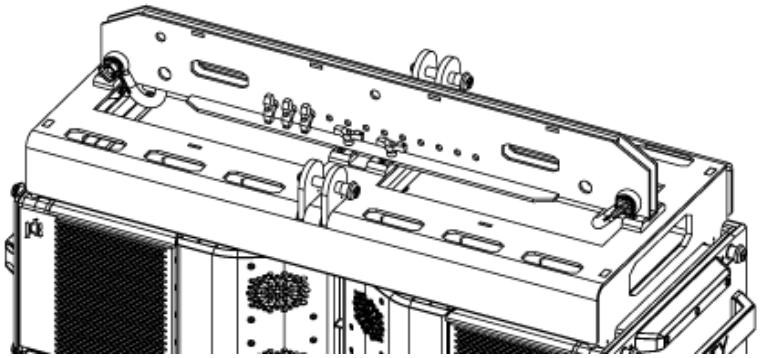

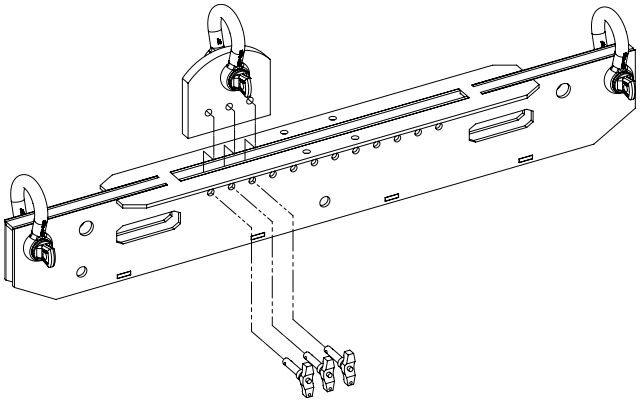

5. Install 1 x 12mmx40mm BLP through the prescribed lug hole in the TFB-ARM and the SPA.
6. Install the remaining 2 x 12mmx40mm BLPs through the adjacent holes in the TFB-ARM and SPA.
7. Delta Plate is to be used when needing to bridle two hang points into one for the Trinity array.

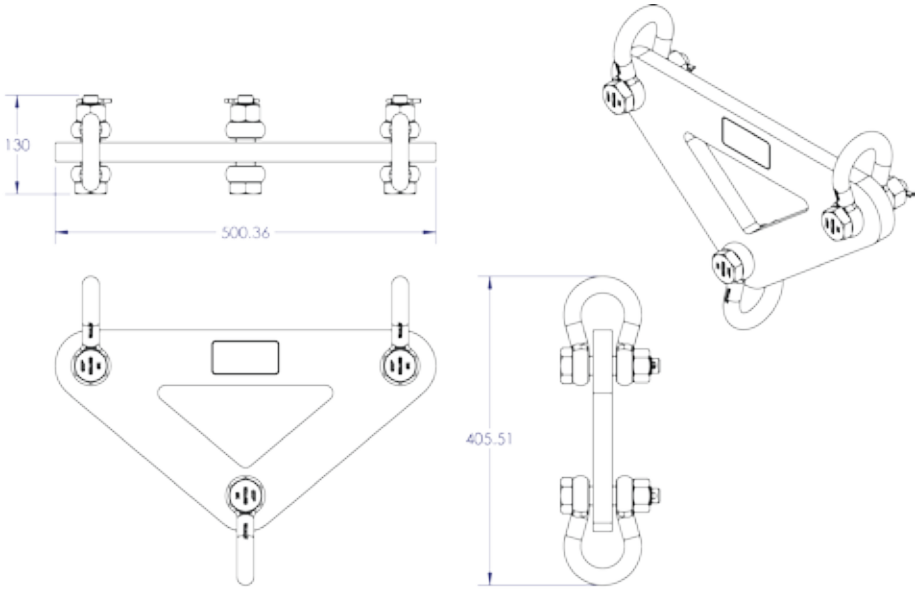

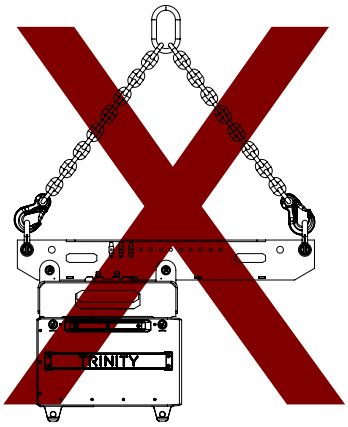

WARNING: All three of the 2 x 12mm x 40mm BLPs must be used

WARNING: Double check the BLPs for a positive lock.

WARNING: Never bridle the 2 permanently installed shackles in the TFB-ARM together to create a single point hang.

CANADIAN OFFICE • 403.452.6004
BAY 133 – 2634 45 AVE SE, CALGARY ALBERTA, T2B 3M1

WWW.PKSOUND.CA

US OFFICE • 650.871.2414
2919 WHIPPLE RD. UNION CITY CA, USA. 94587

7.11 Hanging Trinity Array

Although it is possible to safely hang up to 16 modules using the TFB-ARM in just about any configuration, not all arrangements are physically possible to achieve. It is highly recommended to verify the desired configuration of the line array hang with Kontrol before flying the array. When hanging more than 16 modules, or when using the SPA it is ALWAYS necessary to verify the desired configuration of the line array hang with Kontrol before flying the array.

1. Rigging connections should ALWAYS be made by a qualified, competent person in accordance with the local AHJ.
2. Mount the TFB-LFA and TFB-ARM in the desired configuration according to the instructions above.
3. ALWAYS double check the BLPs for a positive lock.
4. Connect the hoist(s) to the appropriate shackle(s) on the TFB-ARM. (Refer to section 7 regarding Safety Lines and Dead Hangs)

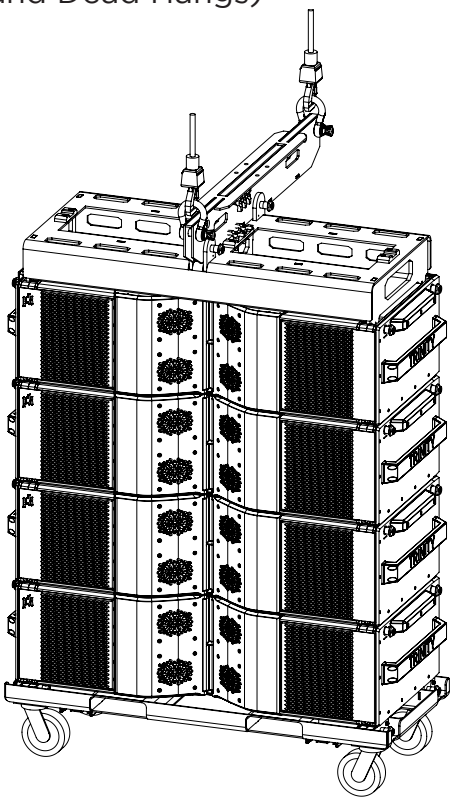

Caution: When using a chain climbing hoist, ensure that the slack chain and/or chain bag does not come into contact with any part of the Trinity Fly Bar Assembly, or any of the Trinity modules.

CANADIAN OFFICE • 403.452.6004
BAY 133 – 2634 45 AVE SE, CALGARY ALBERTA, T2B 3M1

WWW.PKSOUND.CA

US OFFICE • 650.871.2414
2919 WHIPPLE RD. UNION CITY CA, USA. 94587

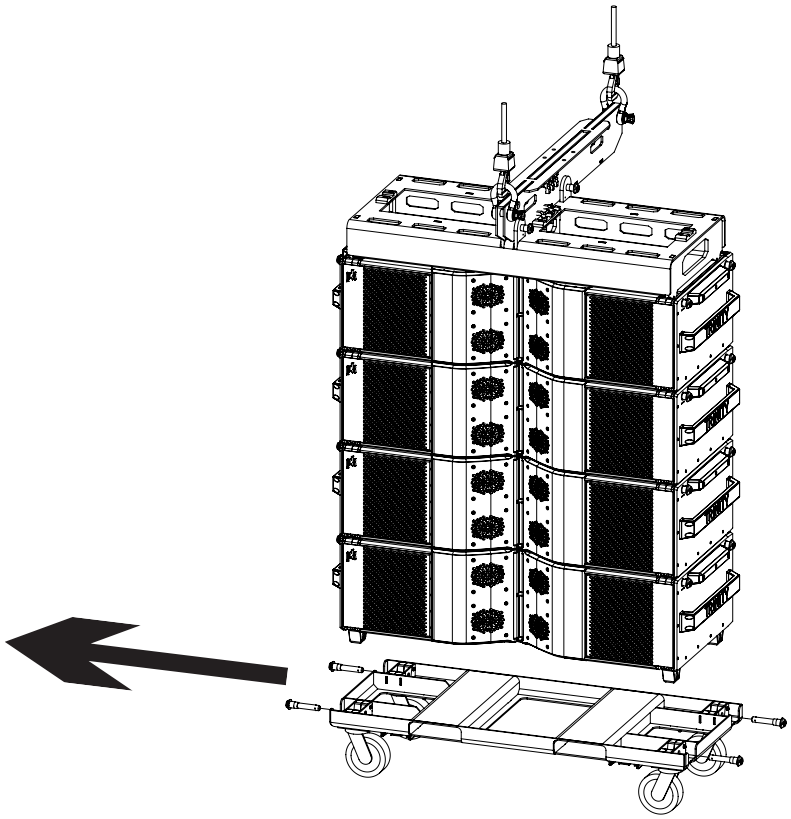

7. Replace the 4 x 19mm BLPs in the Trinity cart
8. Store the empty Trinity cart appropriately

Caution: When raising modules with the SPA, the stack may tilt forward in correlation to how far back the SPA is mounted on the TFB-ARM.

Caution: Ensure the area behind the speaker stack is clear of persons and obstructions in order to avoid damage or injury. Do not lift the array until said areas are clear.

CANADIAN OFFICE • 403.452.6004
BAY 133 – 2634 45 AVE SE, CALGARY ALBERTA, T2B 3M1

WWW.PKSOUND.CA

US OFFICE • 650.871.2414
2919 WHIPPLE RD. UNION CITY CA, USA. 94587

9. Raise the modules until they are just high enough to allow another cart loaded with Trinity-Modules to be placed directly underneath.
10. Remove the 4 x 19mm BLPs from the top Trinity module of the next stack to be flown.
11. Lower the flown Trinity array onto the next stack of modules to be flown. To prevent the stack of modules tipping over or the Trinity cart collapsing, some weight/tension should remain on the lifting hoist. Do not allow the hoisting lines to go slack.
12. Reinsert the 4 x BLPs removed in step 4.
13. ALWAYS double check the BLPs for a positive lock.
14. Return to steps 5 through 8 to remove the cart.
15. Repeat steps 10 through 14 until all modules being flown are connected.
16. Raise the array to trim height and set the desired angle of the flybar if not using
the SPA.
17. Only once the array is at trim height should the inter-module spacing be adjusted. Follow instructions in the Kontrol manual to set the inter-module spacing.

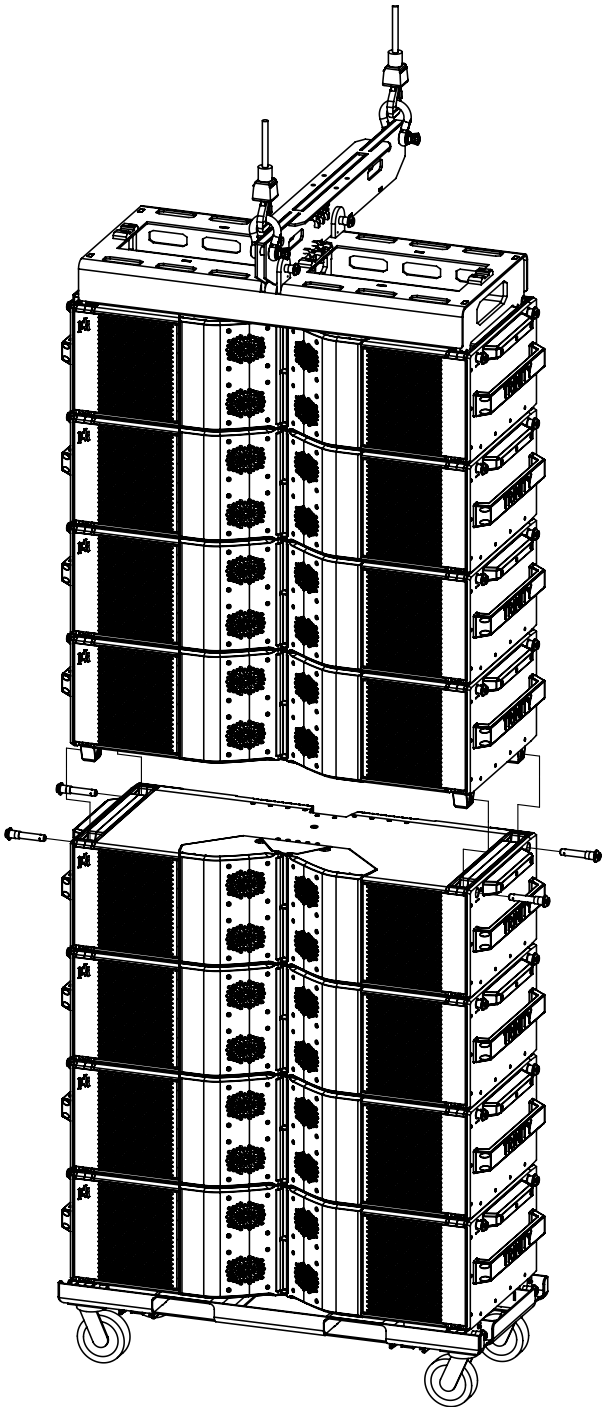

WARNING: Keep fingers and hands clear all possible pinch hazards when stacking and unstacking clusters of Trinity modules.

CANADIAN OFFICE • 403.452.6004
BAY 133 – 2634 45 AVE SE, CALGARY ALBERTA, T2B 3M1

WWW.PKSOUND.CA

US OFFICE • 650.871.2414
2919 WHIPPLE RD. UNION CITY CA, USA. 94587

7.12 Ground Stacking

For added flexibility, up to 6 Trinity Modules can be ground stacked on a single Trinity cart with the TCA outriggers installed. Do not attempt to place more than 4 modules on a Trinity cart without the TCA outriggers installed and the screw-jack feet lowered. Do not attempt to curve any number of modules on a Trinity cart without the TCA outriggers installed and the screw-jack feet lowered.

1. Insert the 2 x TCA outriggers into the 4 x Receivers located on the bottom of the Trinity cart by sliding the connector plate into the slots on the bottom of the cart. Ensure that the longer ends of the TCA outriggers stick out behind the stack of Trinity modules on the Trinity cart.
2. Move the Trinity cart and modules to their desired location for use.

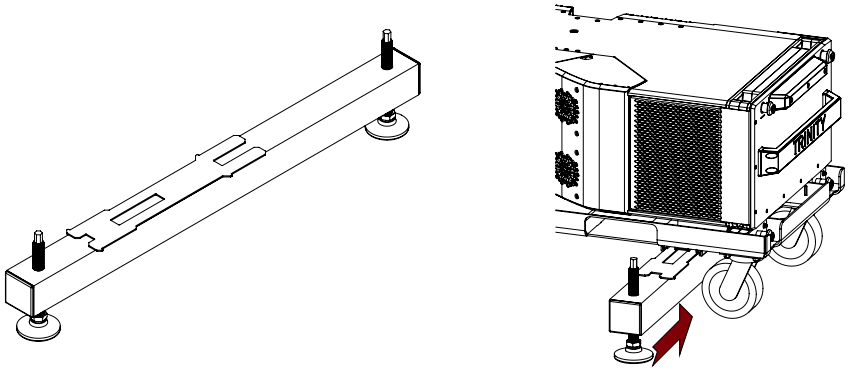

3. Using a 5/8” wrench or socket lower the 4 x screw-jack feet until they rest firmly against the ground. Use extreme caution when ground stacking on soft surfaces such as grass, soil or gravel. It may be necessary to place a foundation appropriate the application under the screw-jack feet to prevent them from sinking.
4. Continue to lower the screw-jack feet until the Trinity cart sits level.

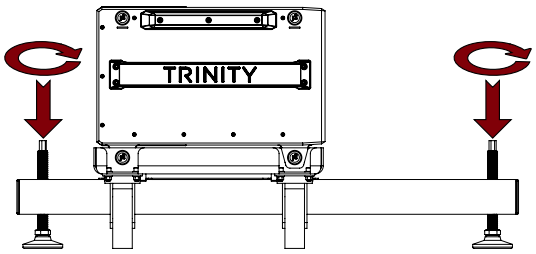

5. The 2 x front screw-jack feet and 2 x rear screw-jack feet can continue to be lowered to provide up to 5° of tilt to the Trinity cart as desired. NEVER place additional material under the back feet to increase the available tilt angle.

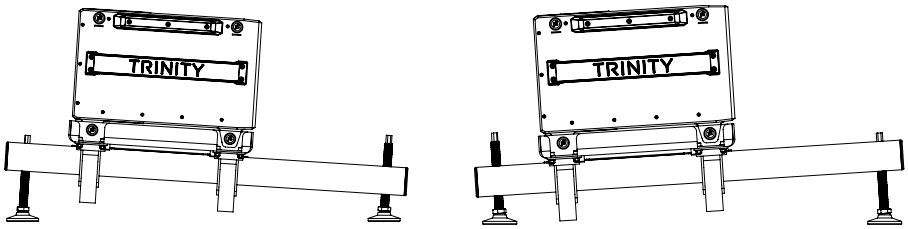

CANADIAN OFFICE • 403.452.6004
BAY 133 – 2634 45 AVE SE, CALGARY ALBERTA, T2B 3M1
WWW.PKSOUND.CA
US OFFICE • 650.871.2414
2919 WHIPPLE RD. UNION CITY CA, USA. 94587

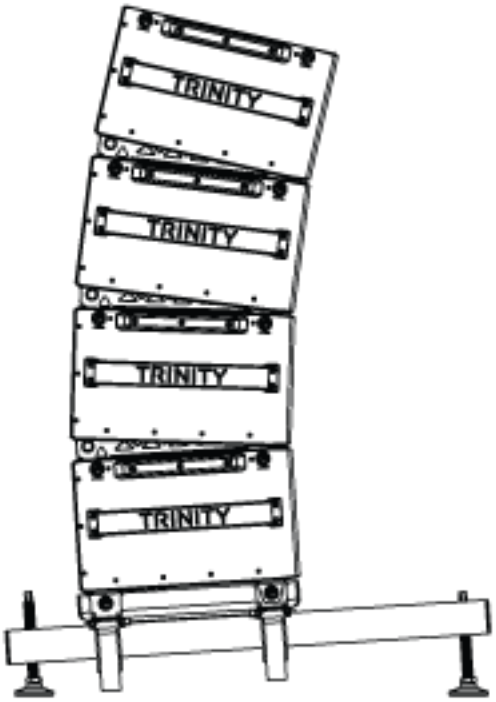

6. When ground stacking modules <u>with outriggers</u> (max. 6), remove the 4 x 19mm BLPs from the top module
7. Place the next module on top of the stack of modules and reinsert the 4 x BLPs removed in step 6.
8. ALWAYS double check the BLPs for a positive lock by doing a pull test with no button decompression.
9. Repeat steps 7 through 8 for the remaining module.
10. ALWAYS double check the BLPs for a positive lock.
11. Now you may set the inter-module spacing via Kontrol or the local controls.
12. Follow all local safety practices and requirements once the intermodule spacing is finished to ensure a safe, temporary installation.

WARNING: Ground stacking without outriggers secured to the cart is not recommended and must never have more than 4 cabinets. It is the user's responsibility to secure the stack of cabinets securely to prevent tipping!

8. Local Control

If a computer with Kontrol is not available, or in case of a network error, it is possible to operate each Trinity module through the LCD and button user interface on the back of each module. There are four directional buttons and a select button to navigate the menu system. The select and right buttons perform the same action, and the left button navigates back.

8.1 Trinity Menu Map

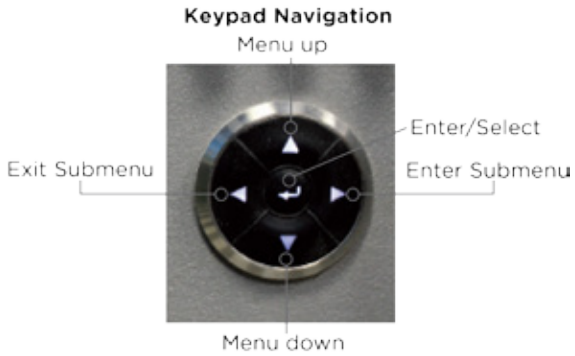

- **LCD Color Code (DSP Mode)**
  1. **Purple - Starting default**
  2. **Blue - Box discovered**
  3. **Green - Audio signal discovered**
  4. **Yellow - High Temperature warning**

  5a. **Red (Flashing) - Limiter hitting**

  5b. **Red (Solid) - In protect mode**
- **Vertical Box Angle**
  - 0.0 degrees
  - 0.5 degrees
  - 1.0 degrees
  - 1.5 degrees
  - 2.0 degrees
  - 2.5 degrees
  - 3.0 degrees
  - 3.5 degrees
  - 4.0 degrees
  - 4.5 degrees
  - 5.0 degrees
  - 5.5 degrees
- **Horizontal Box Angle**
  - 120 degrees
  - 110 degrees
  - 100 degrees
  - 90 degrees
  - 80 degrees
  - 70 degrees
  - 60 degrees
  - Service Mode
- **Utilities**
  - Display Box Angles
  - PK Logo
    - Off
    - On
  - LCD Backlight
    - Off
    - On
    - Audio Status
  - Service Menu
    - Clear Service Flag
    - Set Service Flag
    - View Note
    - Clear Note
  - Firmware Version
  - Display IP Info
  - Display MAC Addresses
  - Force Vertical Reset

CANADIAN OFFICE • 403.452.6004
BAY 133 – 2634 45 AVE SE, CALGARY ALBERTA, T2B 3M1
WWW.PKSOUND.CA
US OFFICE • 650.871.2414
2919 WHIPPLE RD. UNION CITY CA, USA. 94587

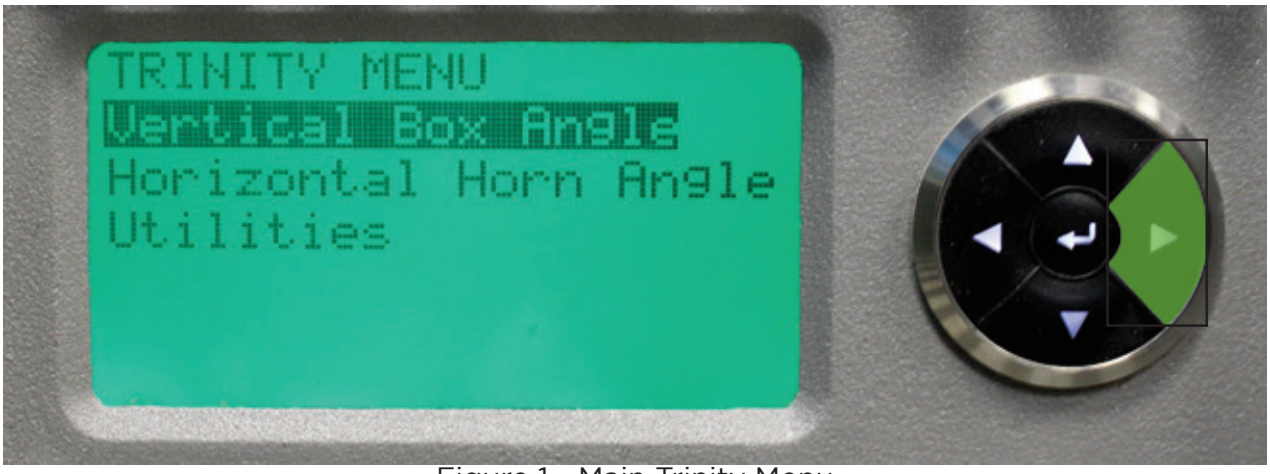

Figure 1 - Main Trinity Menu

8.2 Adjusting Module Angles

Module angles can be adjusted in the main menu by selecting Vertical Box Angle or Horizontal Horn Angle as seen in Figure 1. Once selected, the user will be presented with a range of options for the angle to set.

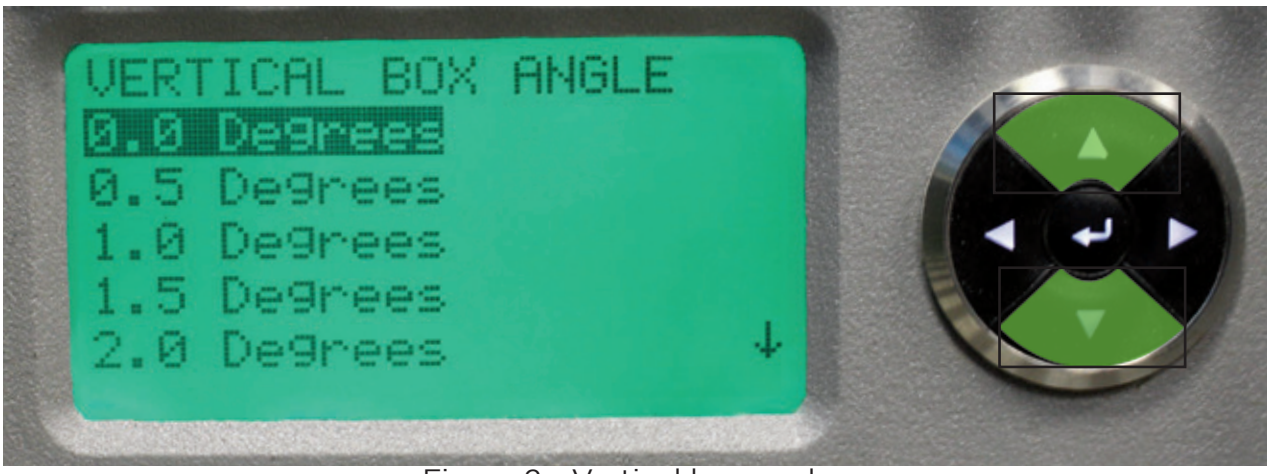

Figure 2 - Vertical box angles

To select one of these angles and change the angle of the module, the user must press and hold the center or right button for the **duration of the movement until a confirmation screen is displayed.**

As a safety feature, the module will immediately cease moving if the user releases the button, and a failure message will be displayed on the LCD.

WARNING: Never adjust the actuation system while playing music or with any person or object within 2m of the loudspeaker array.

CANADIAN OFFICE • 403.452.6004
BAY 133 – 2634 45 AVE SE, CALGARY ALBERTA, T2B 3M1
WWW.PKSOUND.CA
US OFFICE • 650.871.2414
2919 WHIPPLE RD. UNION CITY CA, USA. 94587

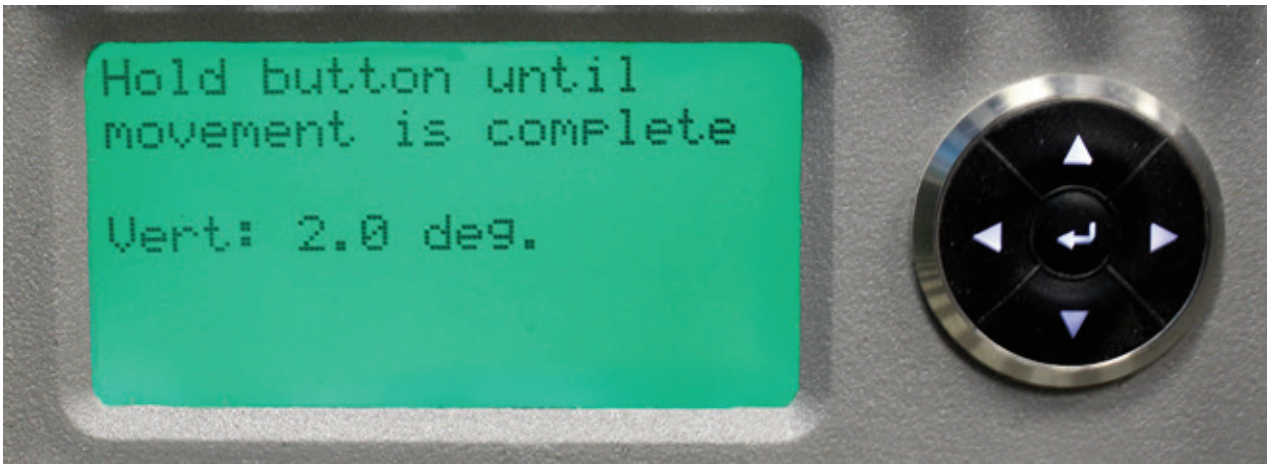

Figure 3 - Hold the button while this message is displayed.

Figure 4 - Once this message is displayed, release the button.

Figure 5 - Red service flag on LCD on start-up

CANADIAN OFFICE • 403.452.6004
BAY 133 – 2634 45 AVE SE, CALGARY ALBERTA, T2B 3M1
WWW.PKSOUND.CA
US OFFICE • 650.871.2414
2919 WHIPPLE RD. UNION CITY CA, USA. 94587

8.3 Utilities Menu

The Utilities menu contains additional actions unrelated to the movement of the module. They are described below:

Utility Menu Item	Description
Display IP Info Display MAC Address	Displays information about the module, useful for diagnosing networking issues enountered with the setup of Trinity.
Logo Backlight	Gives the user the option of turning the "PK" logo on or off at the front of the module. This setting will persist when the module is power cycled.
Display Service Notes	If the user has saved any service notes on the module regarding its audio or mechanical performance, they can be viewed on the LCD through this menu setting.
Service Menu	If a module is malfunctioning, the service flag can be set (and correspondingly cleared) through this menu. If the service flag is set, the LCD will display a red backlight on the first 10 seconds of startup as seen in Figure 6 to let the user know that box was flagged.
Force Vertical Reset	This will set the vertical actuators back to 0° in the event that the actuators are not responding. This option will prompt you for a code before proceeding. It is the following: ↑↑↓↓←→←→↵ **WARNING:** This function should only be used when there are no other modules attached below this module as it can put unwanted torsion on any connected modules. User must remove any BLPs attached to the module.

CANADIAN OFFICE • 403.452.6004
BAY 133 – 2634 45 AVE SE, CALGARY ALBERTA, T2B 3M1

WWW.PKSOUND.CA

US OFFICE • 650.871.2414
2919 WHIPPLE RD. UNION CITY CA, USA. 94587

10. Back Panel

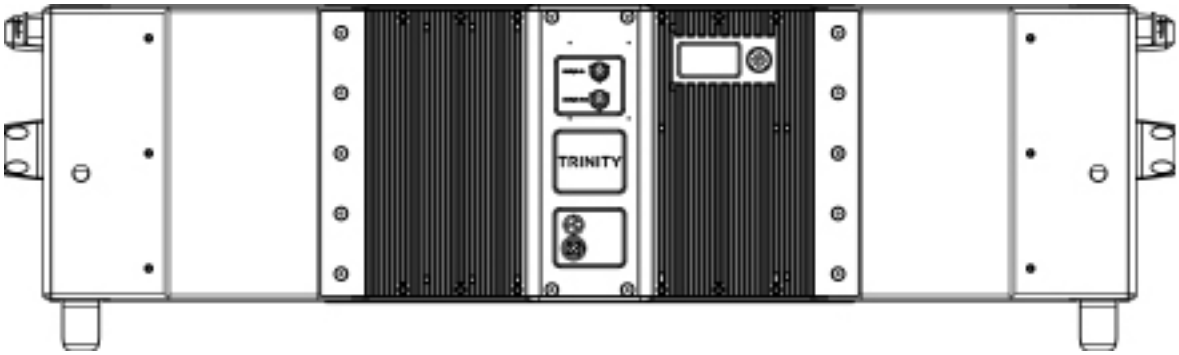

The Trinity rear panel includes an input and output multi-pin connector for audio content via analog or AES Audio, as well as ethernet for system networking with the Kontrol software, AES, analogue audio, and Ethernet are all introduced to the Trinity module via a multi-pin breakout.

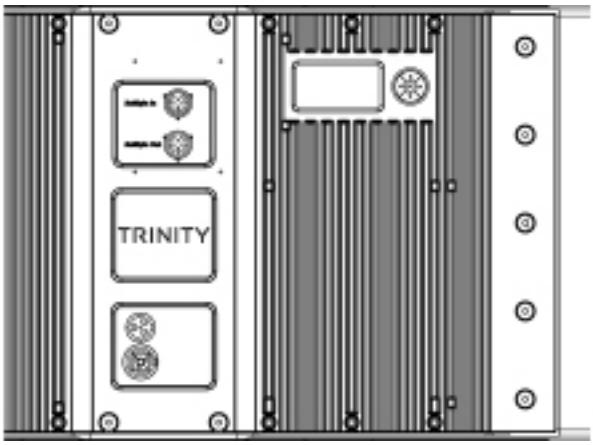

CANADIAN OFFICE • 403.452.6004
BAY 133 – 2634 45 AVE SE, CALGARY ALBERTA, T2B 3M1
WWW.PKSOUND.CA
US OFFICE • 650.871.2414
2919 WHIPPLE RD. UNION CITY CA, USA. 94587

10.1 Audio Connectors

PK's Multi-pin Breakout – A PK Sound proprietary breakout cable accommodates analog and digital inputs into the Trinity via standard XLR and AES cables. It also allows for a standard Cat-5 ethernet cable to connect to the Kontrol network. Several versions of this multi-pin cable are supplied with the Trinity for various purposes. All multi-pin cables share the same technical wiring pin-out. A screw-on cap protects the multi-pin ends from damage when not in use.

C1 - Analogue Audio Input
C2 - Aes Digital Audio Input
C3 - Ethernet Input
Amphenol 15 pin male Input

Audio input - (XLR-3 Pin Female) – The audio input is a three pin XLR female connector which accepts balanced audio signals with an input impedance of 10 kOhm. It uses the following wiring:

- Pin 1 – 220kOhm to chassis and earth ground
- Pin 2 – Positive polarity signal (+)
- Pin 3 – Negative polarity signal (-)
- Case – Earth (AC) ground and chassis

Digital Input - AES (AES-3 Pin Female) – A secondary digital audio input is provided as a redundancy. This is a 3-pin XLR female which accepts digital AES data. AES uses 110Ohm shielded twisted pair (STP) cable with XLR connectors up to a distance of 100m. It uses the following wiring:

- Pin 1 – 220kOhm to chassis and earth ground
- Pin 2 – Positive polarity signal (+)
- Pin 3 – Negative polarity signal (-)

Ethernet Input - Requires a standardized Cat 5 twisted pair cable for carrying signals.

CANADIAN OFFICE • 403.452.6004
BAY 133 – 2634 45 AVE SE, CALGARY ALBERTA, T2B 3M1
WWW.PKSOUND.CA
US OFFICE • 650.871.2414
2919 WHIPPLE RD. UNION CITY CA, USA. 94587

Multi-pin Cable Assorted lengths – The Trinity multi-pin cable is available in 75' length or 150' length (maximum 150') to run from a stage box or snakehead to the first Trinity module in an array.

Connector – A green male to female connector piece is used to join a breakout to a cable length. This is needed as the twist collar of the multi-pin design is not compatible to join with another collar.

Multi-pin Jumper – The 1' multi-pin jumper is used to daisy-chain the processing, signal and network of the modules together. They have the same twist-lock collar that all the multi-pins have.

CANADIAN OFFICE • 403.452.6004
BAY 133 – 2634 45 AVE SE, CALGARY ALBERTA, T2B 3M1

WWW.PKSOUND.CA

US OFFICE • 650.871.2414
2919 WHIPPLE RD. UNION CITY CA, USA. 94587

Green Multi-pin Jumper – The 3' green multi-pin jumpers are used to connect stacks of four Trinity modules together. When taking apart large arrays into clusters of four, there is an inherent risk that a worker or tech could accidentally separate the boxes without unplugging the cables in the back. If this happens, the very short nature of a 1' jumper allows for no allowance for this mistake. Pulling the cables while still attached to the module will damage the internal circuitry of the module or destroy the cable. Using the green multi-pin jumper minimizes this risk by providing additional length and giving the user a moment to realize cables are still connected the modules.

PowerCon True 1' Jumper – Used to daisy-chain Trinity modules via the parallel AC port. Four modules can be daisy-chained on a single 20amp circuit at 208V, while two modules can be daisy-chained on a single 20amp circuit at 120V.
Powercon True One to Edison Cable 5 – To power a single Trinity module, a Powercon True

One to standard Edison is available.

*Edison = American Standard
U-Ground = Canadian Standard
Nema 5-15 = World Standard
**All connections are standard North American

CANADIAN OFFICE • 403.452.6004
BAY 133 – 2634 45 AVE SE, CALGARY ALBERTA, T2B 3M1
WWW.PKSOUND.CA
US OFFICE • 650.871.2414
2919 WHIPPLE RD. UNION CITY CA, USA. 94587

11. Transportation

11.1 Covers

Covers come in 2 pieces, a top cap piece which covers the top (with or without flybar), as well as a wrap piece that covers the remainder of the modules.. The covers are designed to fit on 4 modules stacked on a cart with or without a flybar stowed on top. The Cap is equipped with 2 strips of velcro for attaching the wrap, the lower strip for use with the flybar and the upper strip for without.

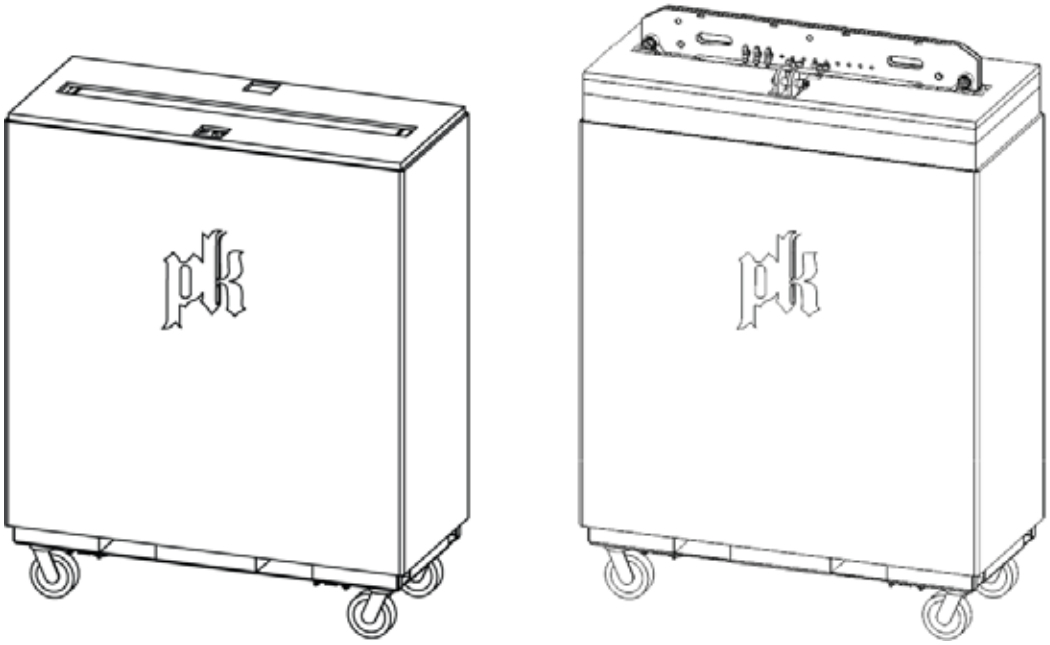

11.2 Carts

- Carts are designed to transport a maximum of 4 modules with or without a flybar on top.
- Ensure that modules stacked on carts are secured together using the supplied locking pins.
- ALWAYS double check the BLPs for a positive lock.
- Carts are equipped with fork pockets to allow the unit to be picked up with a forklift. Failure to use the pockets may result in injury or damage.

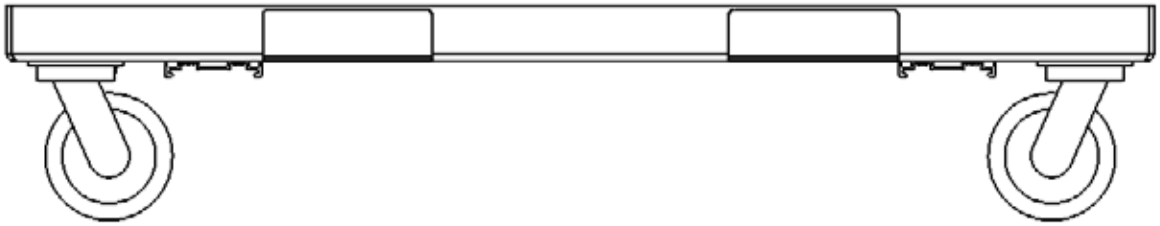

CANADIAN OFFICE • 403.452.6004
BAY 133 – 2634 45 AVE SE, CALGARY ALBERTA, T2B 3M1
WWW.PKSOUND.CA
US OFFICE • 650.871.2414
2919 WHIPPLE RD. UNION CITY CA, USA. 94587

11.3 Cables

- Trinity has 2 options for Socapex type power breakouts. The 120 Volt version has tails spaced to supply power to every 2nd module. The 208-240 Volt version has tails spaced to power every 4th module.
- Short power and signal interconnect cables can remain attached to their modules when they are stored/transported on carts.
- 3' interconnect signal cables are inserted between every 4th module.
- Cables that should be removed for storage/transport have green molded ends to make identification quick and easy.

12. Care and Cleaning

Trinity loudspeakers are coated with a resilient, tour-grade high-impact Polyeura coating. It may be cleaned with a mild soapy damp microfiber cloth and wiped down finally with a dry cloth. To reduce the risk of electrical shock, ensure the system in unplugged from AC power before cleaning. To clean dust off the speaker cone, use a can of compressed air such as commercial air dusters. Do not blow dust into the horn flare, it may damage the high frequency compression driver.

CANADIAN OFFICE • 403.452.6004
BAY 133 – 2634 45 AVE SE, CALGARY ALBERTA, T2B 3M1
WWW.PKSOUND.CA
US OFFICE • 650.871.2414
2919 WHIPPLE RD. UNION CITY CA, USA. 94587

13. Specifications

Acoustic Properties	
Horizontal Dispersion	50° - 120° remotely adjustable
Horizontal Resolution	10° symmetric & asymmetric
Vertical Adjustment	0 – 5.5° remotely adjustable
Vertical Resolution	0.1°
Response	40hz - 22khz (+/-10)
Transducers	
HF Drivers	2 x 4” coaxial (500w AES)
MF Drivers	4 x 6.5” CMI loaded (600w AES)
LF Drivers	2 x 12” horn-loaded (1600w AES)
Output Capability	
Sensitivity	
HF @ 60° (1)	116.6 dB
MF (2)	108.5 dB
LF (2)	102.8 dB
SPL - peak (3)	
HF	147.6 dB
MF	141.5 dB
LF	141.8 dB
Amplification	
Amplifier Power	6000W RMS
Voltage	Auto-switching 100-240V
Power Consumption	660W (6/3) amps
Input Impedance	10kΩ Balanced
Nominal Input Sensitivity	OBDU
Network	Ethernet
Input / Output Connections	
Audio / Network	14 pin Amphenol – IP65
Power	Neutrik powerCON® TRUE1 – IP65 (only when mated)
Module Properties	
Weight	259.1 lb / 117.7 kg
Maximum Ambient Operating Temperature	45°C / 113°F
Dimensions (WxHxD)	54.9” x 14” x 23” / 1394mm x 355mm x 584mm
Max Number Modules	24
Rain Protection	Weather resistant amplifier plate & IP65 input connectors
Module Construction	High-grade void-free Baltic birch
Rigging Construction	6061-T6 aluminum
External Coating	Black polyurea
Grill	Powder coated aluminum
Note (1) *Note (2)* *Note (3)*	*Measured whole space 1w/4m referenced to 1m* *Measured half space 1w/1m referenced to whole space* *Maximum calculated SPL*

CANADIAN OFFICE • 403.452.6004
BAY 133 – 2634 45 AVE SE, CALGARY ALBERTA, T2B 3M1

WWW.PKSOUND.CA

US OFFICE • 650.871.2414
2919 WHIPPLE RD. UNION CITY CA, USA. 94587

14. Dimensions

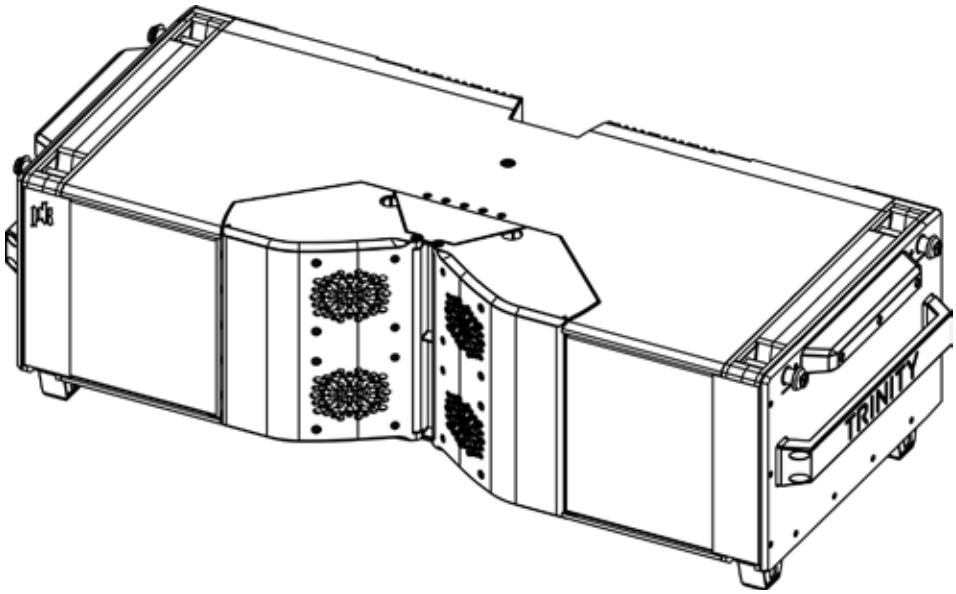

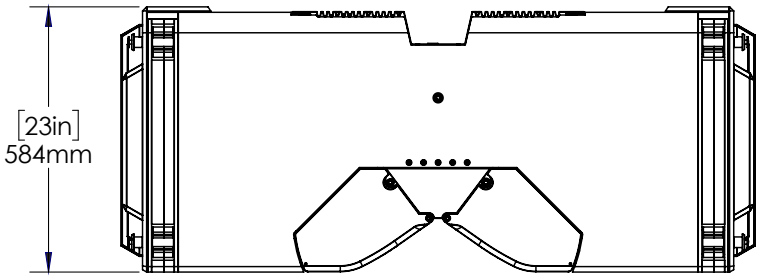

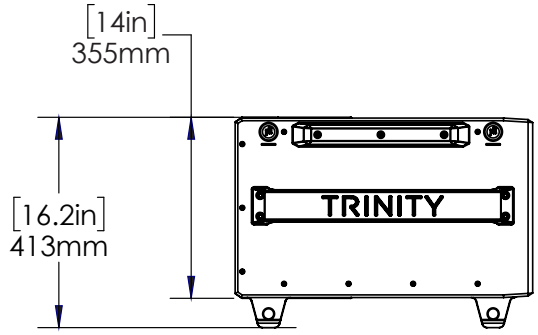

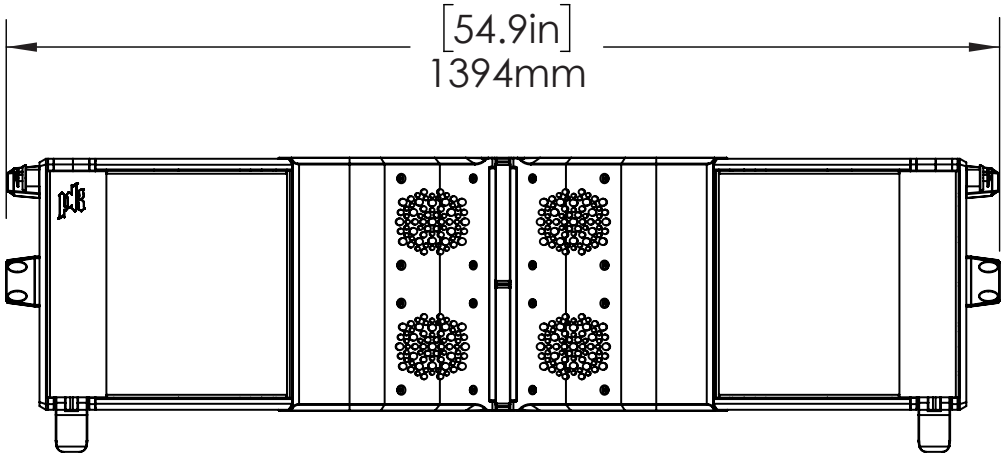

CANADIAN OFFICE • 403.452.6004
BAY 133 – 2634 45 AVE SE, CALGARY ALBERTA, T2B 3M1
WWW.PKSOUND.CA
US OFFICE • 650.871.2414
2919 WHIPPLE RD. UNION CITY CA, USA. 94587