YASKAWA

SOLUTIONS IN MOTION®

EP4000D
EPH4000D

PRESS TENDING

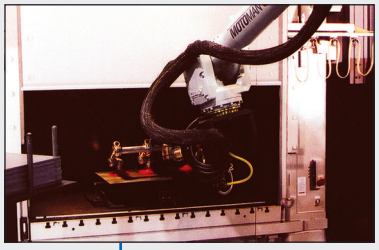

PROCESS-SPECIFIC DESIGN

DX100 PROGRAMMING PENDANT

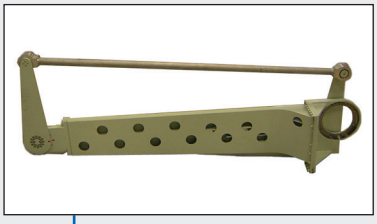

OPTIONAL PARALLEL LINK TOOL

TOP REASONS TO BUY

- Application-specific Expert Press Handling robots provide maximum performance and durability
- 34 conductor internal I/O cable provides maximum conductors in a high durability design
- Patented multiple robot control (up to 8 robots/72 axes) simplifies programming
- Energy saving design, reduces power consumption up to 25%
- Small lightweight programming pendant
- Shelf-mounted robots provide the floor space that is frequently needed for die change out

Payload: 200 kg

The six-axis, Motoman® EP4000D "Expert Press" robot and longer life EPH4000D "Expert Press Handling" robot have high vibration ratings and are designed for press room use.

Fast, Streamlined and Powerful

- EP4000D and EPH4000D robots feature a 200 kg payload, a 3,505 mm horizontal reach and 2,629 mm vertical reach.
- These robots can achieve 12 strokes per minute with a press pitch of 6.5 m. Extended reach allows these robots to service presses with press pitches of up to 9 m. Slender design of the robots allow work in tight spaces and service multiple presses.
- The EP4000D features cast iron castings, while the EPH4000D has aluminum castings in many places to reduce inertia of the moving robot arm. The EPH model also includes fans on more axes to dissipate heat generated in high duty cycle press tending applications.
- The optional Parallel Link Tool (PLT) extends the robot's reach by 1,650 mm with the robot wrist parallel to the floor. The parallel link tool reduces potential interference between the robot arm and the die. In addition, the PLT allows the dies to be loaded into the presses in the same orientation as for manual operation. Without the PLT, press line installations require that every other die be rotated 180 degrees because of the robot's S-axis rotation.

DX100 Controller

- Patented multiple robot control supports up to 8 robots/72 axes.
- Windows® CE programming pendant with color touch screen and USB interface.
- The DX100 controller provides faster processing speeds for smoother interpolation. Quicker I/O response. Accelerated Ethernet communication.
- Extensive I/O suite includes integral PLC and touch screen HMI, 2,048 I/O and graphical ladder editor.
- Supports all major fieldbus networks, including EtherNet/IP, DeviceNet, Profibus-DP and many others.
- Compliant to ANSI/RIA R15.06-1999 and other relevant ISO and CSA safety standards. Optional Category 3 functional safety unit.

EP4000D/EPH4000D ROBOT

EP4000D shown. EPH4000D is very similar, but reference the engineering drawing for complete information. All dimensions are metric (mm) and for reference only.

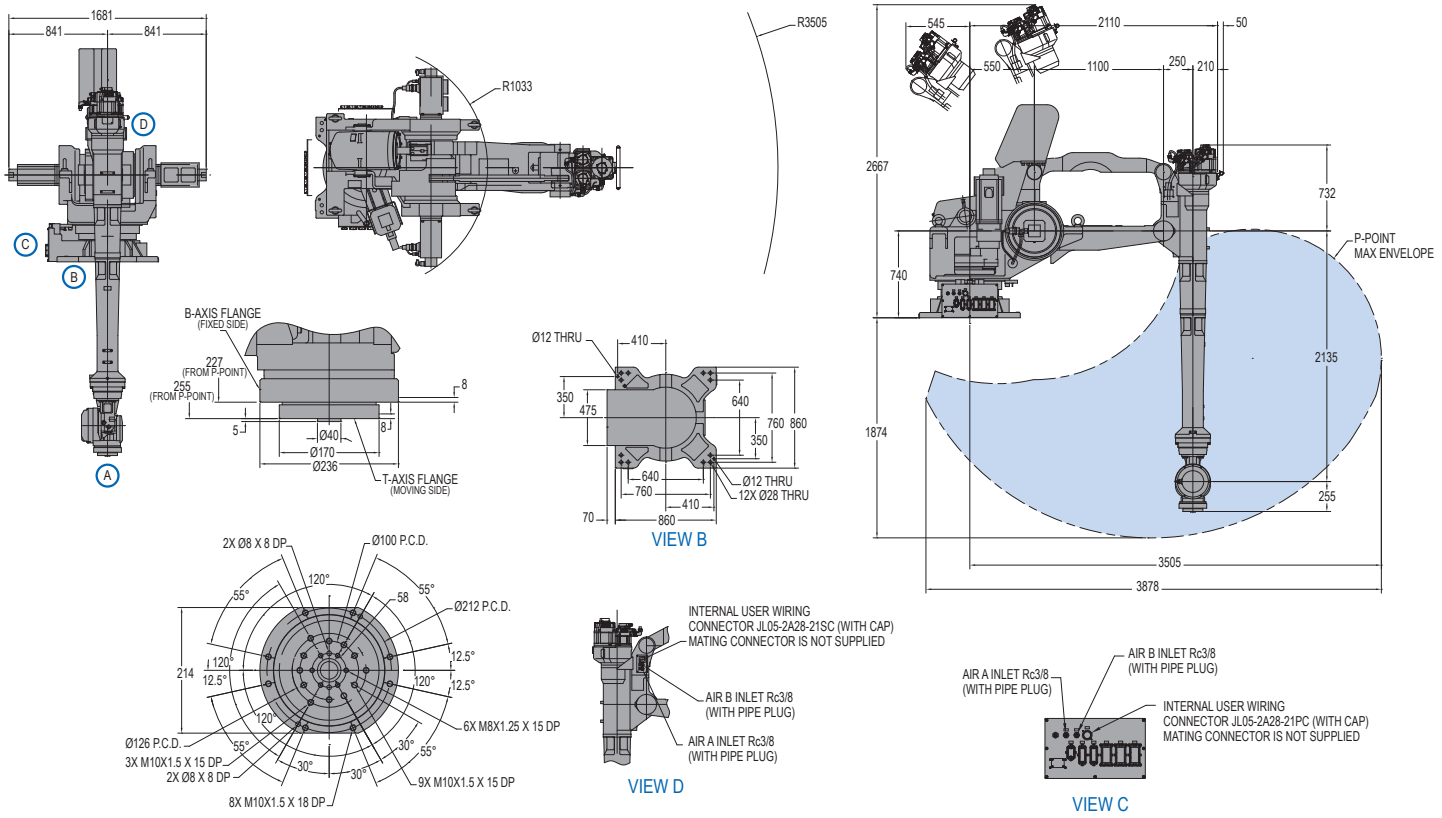

ROBOT SPECIFICATIONS

		EP4000D Standard Press Robot	EPH4000D Longer Operating Life
Structure		Vertical jointed-arm type	Vertical jointed-arm type
Controlled Axes		6	6
Payload		200 kg (441 lbs.)	200 kg (441 lbs.)
Vertical Reach		2,614 mm (103")	2,629 mm (103.5")
Horizontal Reach		3,505 mm (138")	3,505 mm (138")
Repeatability		±0.5 mm (0.02")	±0.5 mm (0.02")
Maximum Motion Range	S-Axis (Turning/Sweep) L-Axis (Lower Arm) U-Axis (Upper Arm) R-Axis (Wrist Roll) B-Axis (Bend/Pitch/Yaw) T-Axis (Wrist Twist)	±150° +25°/-122° +53°/-70° ±360° ±120° ±360°	±150° +25°/-122° +53°/-70° ±360° ±120° ±360°
Maximum Speed	S-Axis L-Axis U-Axis R-Axis B-Axis T-Axis	90°/s 90°/s 90°/s 80°/s 80°/s 160°/s	90°/s 90°/s 90°/s 80°/s 80°/s 160°/s
Approximate Mass		3,100 kg (6,835.5 lbs.)	3,050 kg (6,725.3 lbs.)
Brakes		All axes	All axes
Power Consumption		22 kVA	22 kVA
Allowable Moment	R-Axis B-Axis T-Axis	1,274 N • m 2,156 N • m 0 N • m	1,274 N • m 2,156 N • m 0 N • m
Allowable Moment of Inertia	R-Axis B-Axis T-Axis*	84.5 kg • m^2 330 kg • m^2 80 kg • m^2	84.5 kg • m^2 330 kg • m^2 80 kg • m^2
I/O Lines		34 wires (0.5 mm^2)	34 wires (0.5 mm^2)
Air Lines		2 – 3/8" air lines	2 – 3/8" air lines

*Rating with T-Axis parallel to the floor

DX100 CONTROLLER SPECIFICATIONS**

Dimensions (mm)	1,200 (w) x 1,000 (h) x 650 (d) 47.2" x 39.4" x 25.6")
Approximate Mass	250 kg max. (551.3 lbs)
Cooling System	Indirect cooling
Ambient Temperature	During operation: 0° to 45° C (32° to 113° F) During transit and storage: -10° to 60° C (14° to 140° F)
Relative Humidity	90% max. non-condensing
Primary Power Requirements	3-phase, 240/480/575 VAC at 50/60 Hz
Digital I/O NPN-Standard PNP-Optional	Standard I/O: 40 inputs/40 outputs consisting of 16 system inputs/16 system outputs, 24 user inputs/24 user outputs 32 Transistor Outputs; 8 Relay Outputs Max. I/O (optional): 2,048 inputs and 2,048 outputs
Position Feedback	By absolute encoder
Program Memory	JOB: 200,000 steps, 10,000 instructions CIO Ladder Standard: 15,000 steps Expanded: 20,000 steps
Pendant Dim. (mm)	169 (w) x 314.5 (h) x 50 (d) (6.7" x 12.4" x 2")
Pendant Weight	.998 kg (2.2 lbs)
Interface	One Compact Flash slot; One USB Port (1.1)
Pendant Playback Buttons	Teach/Play/Remote Keyswitch selector Servo On, Start, Hold, and Emergency Stop Buttons
Programming Language	INFORM III, menu-driven programming
Maintenance Functions	Displays troubleshooting for alarms, predicts reducer wear
Number of Robots/Axes	Up to 8 robots, 72 axes
Multi Tasking	Up to 16 concurrent jobs, 4 system jobs
Fieldbus	DeviceNet Master/Slave, AB RIO, Profibus, Interbus-S, M-Net, CC Link, EtherNet IP/Slave
Ethernet	10 Base T/100 Base TX
Safety	Dual-channel Emergency Stop Pushbuttons, 3-position Enable Switch, Manual Brake Release Meets ANSI/RIA R15.06-1999, ANSI/RIA/ISO 10218-1-2007 and CSA Z434-03

**See DX100 Controller data sheet (DS-399) for complete specifications

www.motoman.com

YASKAWA

YASKAWA AMERICA, INC. ■ MOTOMAN ROBOTICS DIVISION
100 AUTOMATION WAY, MIAMISBURG, OHIO 45342
TEL: 937.847.6200 ■ FAX: 937.847.6277

TECHNICAL SPECIFICATIONS SUBJECT TO CHANGE WITHOUT NOTICE
DS-535-A ©2017 YASKAWA AMERICA, INC. JANUARY 2017

MOTOMAN IS A REGISTERED TRADEMARK
WINDOWS IS A REGISTERED TRADEMARK OF MICROSOFT
ALL OTHER MARKS ARE THE TRADEMARKS AND
REGISTERED TRADEMARKS OF YASKAWA AMERICA, INC.