WALKER

Illustrated Parts Manual

Beginning S/N: 147007
P/N 5000-36

KEY TO ABBREVIATIONS USED IN THIS MANUAL

Abbreviation	*What it Represents*
º (Dimension)	Degrees (Angle)
" (Dimension)	inches
(-)	Negative (Polarity)
(+)	Positive (Polarity)
AT	All-Terrain
CCW	Counter-clockwise
Conn.	Connector
CW	Clockwise
D	Diameter
DC	Deck, Collection (number refers to size in inches)
DM	Deck, Mulching (number refers to size in inches)
DR	Deck, Rear Discharge (number refers to size in inches)
DS	Deck, Side Discharge (number refers to size in inches)
DU	Garlock (Bearing)
ESNA (Fastener)	Nylon Insert Locknut
FSC	Forward Speed Control
GA	Gauge
gal.	gallon
GHS	Grass Handling System
GR (Fastener)	Grade
HD	Heavy Duty
HP	Horse Power
ID	Identification or Inside Diameter
L	Length
LH	Left Hand (orientated with operator on seat)
LP	Low Profile
mm (Dimension)	millimeters
MS (Fastener)	Machine Screw
NS (as part number)	Item is not sold by Walker Manufacturing
OD	Outside Diameter
oz.	ounce
PFH (Fastener)	Phillips Flat Head
P/N	Part Number
PPH (Fastener)	Phillips Pan Head
PTH (Fastener)	Phillips Truss Head
PTO	Power Take-Off
QKS	Quick Slide
qt.	quart
RH	Right Hand (orientated with operator on seat)
SAE (Fastener)	Society of Automotive Engineers
SBH (Fastener)	Socket Button Head (Bolt)
SD	Side Discharge
SFH (Fastener)	Slotted Flat Head
SHC (Fastener)	Socket Head Cap
SHL (Fastener)	Shoulder (Bolt)
SM (Fastener)	Sheet Metal (Screw)
S/N	Serial Number
Spg.	Spring
SQH (Fastener)	Square Head
SS (Fastener)	Stainless Steel
ST (Fastener)	Self-Tapping (Screw)
Term	Terminal
V	Volts

NOTE: In some instances, combinations of abbreviations may be used (e.g. PPHMS - Phillips Pan Head Machine Screw).

ILLUSTRATED PARTS LIST

Section of Tractor Covered	*Page*
Decals	
Tractor Decals	2
Body / Chassis Assemblies	
Body / Chassis Assembly	4
Rear Body Assembly	6
Tractor Components	
Main Component Power Transmission	8
Engine Group	10
Hydrostatic Ground Drive Assemblies	12
Steering Control Assemblies	14
GHS Group	16
GHS Powerfil® Assembly (7.0)	18
GHS 7.0 Bushel Catcher Assembly	20
Electrical Components	
Electrical Assembly	22
Electrical Assemblies (GHS 7.0 Bushel Components)	24
Electrical Connectors	26
Maintenance	
Lubrication Points	28
Wiring Schematic	30
Maintenance And Service Record Sheet	31
Warranty	
Limited Warranty	33

TRACTOR DECALS

ITEM NO.	PART NO.	DESCRIPTION	LOCATION	NO. REQ'D GHS
Walker Product Decals				
1	5800-11	Walker (8" Round)	7.0 Bushel Catcher (one on each side)	2
2	9804-1	Axle Lockout	Chassis	2
3	8600-25	LH Fender	Body, LH near Seat	1
4	8821-22	Decal, S14i	Body	1
5	5856-1	Made in USA	Body	1
6	8600-26	RH Fender	Body, RH near Seat	1
Danger Decals Warning Decals Caution Decals				
7	8600-10	Danger, Pinch Point	7.0 Bushel Catcher Mounting Frame Assembly (one on each side)	2
8	8600-12	Danger, Engine Exhaust	Engine	1
9	8600-4	Danger, Rotating Blower Blades	Body, Near Body Chute	1
Maintenance Decals				
10	5869	Removable Screen	7.0 Bushel Catcher Removable Screen	1
11	5855	Important, Engine Cooling	Engine	1
12	5082-5	Fuel Recommendations	Engine	1
13	5802-3	Engine Service Light	Body	1
14	6875	PTO Alignment Arrow	Universal Joint Tube Assembly	1

NOTE: All parts requiring decals are shipped with decals applied.

TRACTOR DECALS

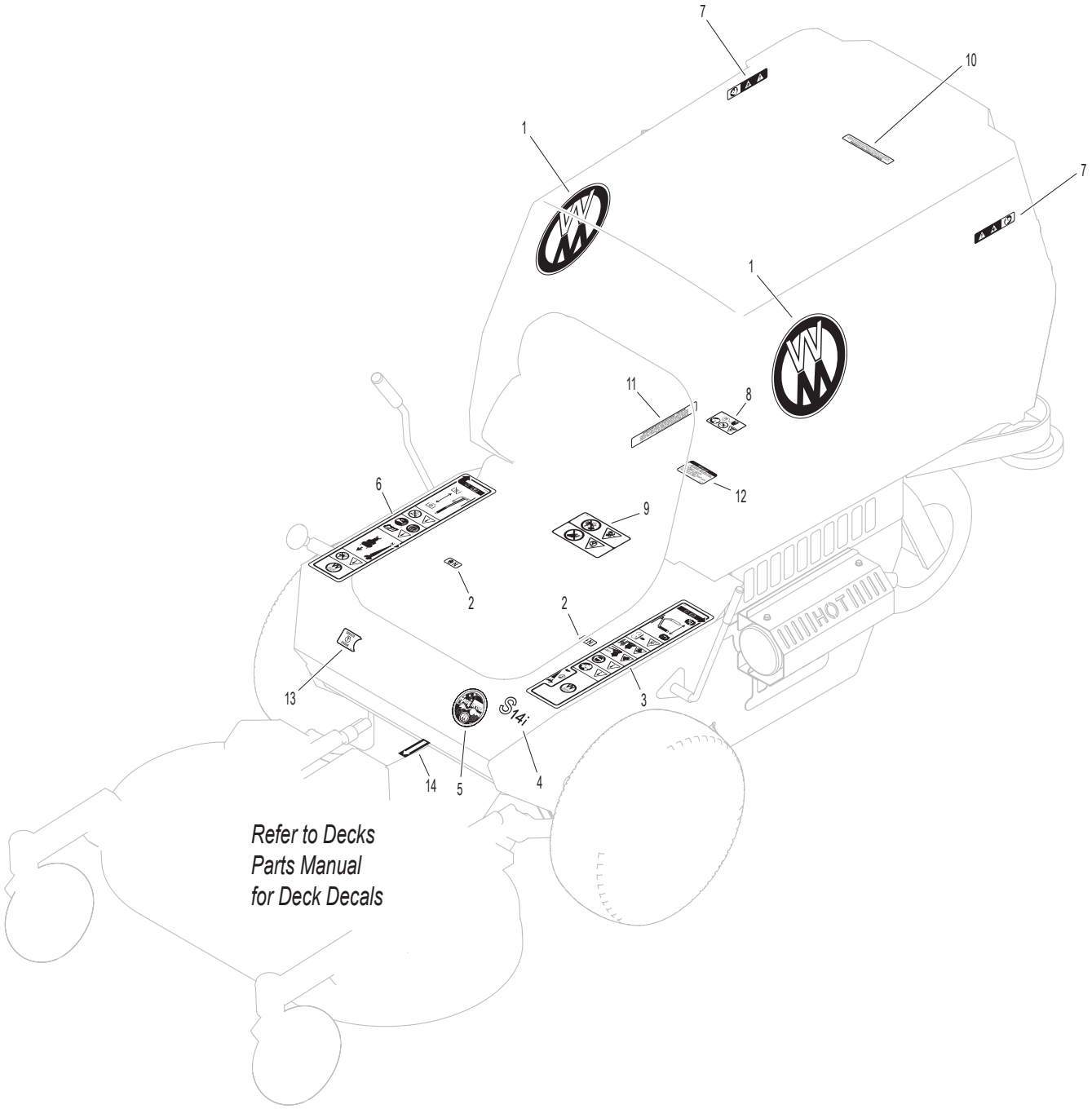

BODY / CHASSIS ASSEMBLY

ITEM NO.	PART NO.	DESCRIPTION	NO. REQ'D
Seat Assembly			
1	5103	Seat	1
2	7223-4	Compression Spring	2
3	5841-1	Retainer Washer	4
4	7434	Washer (3/8 x 1-1/4 x 1/4)	2
5	7845-1	Rubber Bumper (1.375 x .750)	2
6	7440-5	Shock Mount (1-1/4 x 3/4)	2
Rear Bumper Assembly			
7	7516-5	Catcher Pivot Bushing	2
8	5517-11	Rear Bumper	1
9	7517-2	Catcher Pivot Plate	2
10	5162	Roller Wheel (5" Rubber)	2
Body Assembly			
11	2505	Leaf Spring	1
12	5100-19	Welded Body	1
13	4102-1	Body Guide, Upper	1
14	7844	Rubber Bumper (1.25 x .250)	2
15	NS	Body ID Plate	1
16	5180	Edge Molding, Lever Opening	2
17	4504-3	Hinge (19")	1
Tilt-Up Latch Assembly**			
18	5847	Plastic Tip	1
19	5744-20	Spring Arm, Tilt-Up Latch	1
20	5744-10	Spring Pivot Bushing	1
21	5744-15	Compression Spring (3/8 x 5/8)	1
22	5744-13	Mount Angle, LH	1
23	5744-12	Hook, Tilt-Up Latch	1
24	5744-14	Mount Angle, RH	1
Chassis Assembly			
25	5300-14	Chassis Side Cover, RH	1
26	5300-18	Chassis Frame	1
27	5267-1	Retainer Collar (1") (Includes Item # F413)	1
28	5270-1	Pivot Bearing	2
29	5420-2	Tail Wheel Fork	1
30	5037-1	Bearing, Tail Wheel	2
31	5035	Tail Wheel & Tire Assembly (13 x 6.50-6)	1
	5035-1	Tail Wheel Tire (13 x 6.50-6)	*
	5036	Tail Wheel & Hub (6 x 4.5)	*
32	5038-1	Axle Spacer Tube (6-5/8)	1
33	5300-15	Chassis Side Cover, LH	1
34	5146	10mm Ball Stud	2
35	5145-4	Gas Spring Assembly (Includes Item # 34)	1
36	7383-1	Body Latch Hook	1
37	7854	Plastic Tip, Red	1
38	7222	Extension Spring (1/4 x 3)	1
39	4102-2	Body Guide, Lower	1

ITEM NO.	PART NO.	DESCRIPTION	NO. REQ'D
Deck Support Arm & Hitch Assemblies			
40	5830	Grease Fitting	2
41	6840-1	Support Arm Bushing (2-1/16)	2
42	6431-5	Deck Arm Mount	2
43	6431-3	Deck Support Arm, LH (Includes Item # 40)	1
44	5775-2	Hitch Pin (#6)	2
45	5303-5	Deck Arm Hydro Mount, LH	1
46	5303-6	Deck Arm Hydro Mount, RH	1
47	6431-4	Deck Support Arm, RH (Includes Item # 40)	1
Fasteners			
	F002	10-24 Keps Nut	2
	F004	1/4-20 Keps Nut	14
	F005	1/4-20 ESNA Nut	1
	F009	5/16-18 Whiz Locknut	22
	F012	3/8-16 Keps Nut	2
	F013	3/8-16 Whiz Locknut	4
	F014	3/8-16 ESNA Nut	2
	F016	1/2-13 Self-Locking Nut	1
	F020	5/16-18 ESNA Nut	1
	F025	10-24 x 3/8 PPHMS	2
	F029	1/4-20 x 1/2 Hex Bolt	4
	F031	1/4-20 x 5/8 Hex Bolt	8
	F034	5/16-18 x 3/4 Hex Bolt	8
	F042	3/8-16 x 2-1/4 Hex Bolt	2
	F048	1/2 SAE Washer	2
	F049	5/16 SAE Washer	8
	F053	7/16 Int. Star Lock Washer	2
	F059	3/8 Wave Spring Washer	2
	F093	5/16-18 x 1 Hex Bolt	1
	F116	1/4-20 x 1-1/4 Hex Bolt	1
	F151	3/8-16 x 7/8 Hex Bolt	4
	F183	.312 x .700 x .074 Washer	2
	F200	7/16-20 x 3 Grade 8 Bolt	2
	F206	#2 x 3/16 Drive Pin	2
	F227	3/8 x 1-1/4 x 1/8 Washer	2
	F241	.375 x .875 x .10 Washer	4
	F246	1/4-20 x 1/2 PTHMS	8
	F257	3/8 x 1-11/16 Shoulder Bolt	2
	F292	1/2-13 x 8-1/2 Hex Bolt, GR 5	1
	F341	Coil Roll Pin (7/64 x 9/16)	1
	F342	5/16 Conical Washer	2
	F413	5/16-24 x 5/16 Set Screw	2
	F438	5/16-18 x 2-3/4 Hex Bolt	4
	F477	1/4-20 x 5/8 Carriage Bolt	2

* Service Part Only

** Complete Tilt-Up Latch Assembly Kit available by ordering kit # 5747.

BODY / CHASSIS ASSEMBLY

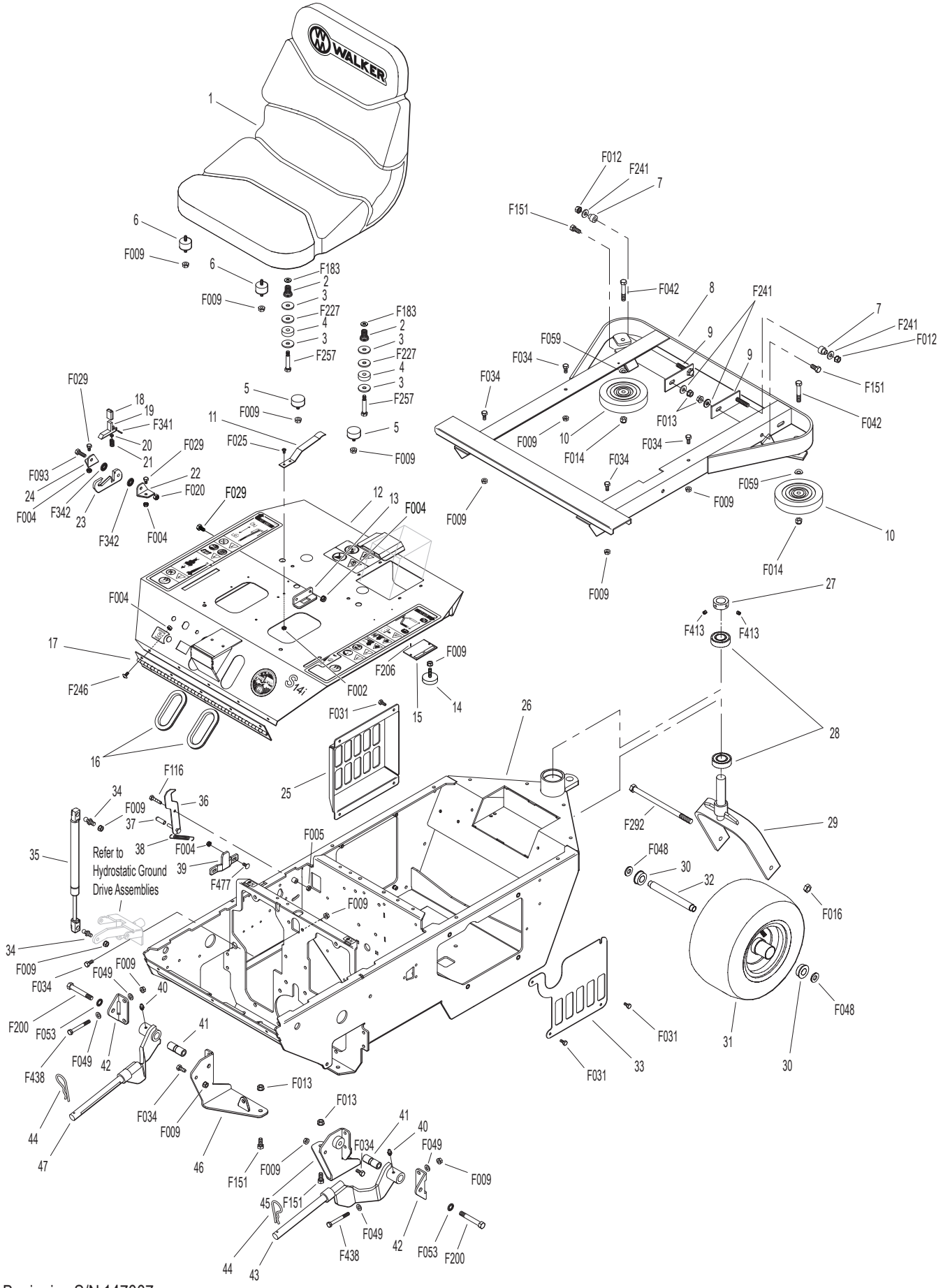

Beginning S/N 147007
Use only genuine **Walker**® replacement parts.

REAR BODY ASSEMBLY

ITEM NO.	PART NO.	DESCRIPTION	NO. REQ'D
Rear Body Assembly			
1	6515	Catcher Support Frame	1
2	8082-3	Heat Shield	1
3	5100-18	Rear Body Tie-In	1
4	5100-15	Rear Body Panel, LH	1
5	6014-1	Fuel Pump Guard	1
6	5977-8	Grommet (1 x 1-3/4)	1
7	5100-14	Rear Body Panel, RH	1
8	8515-14	Catcher Handle Plate, RH	1
9	8515-13	Catcher Handle Plate, LH	1
10	7147	Spring Clip	2
11	7146	13mm Ball Stud	2
12	7145	Gas Spring Assembly (Includes Items # 10 & 11)	1

ITEM NO.	PART NO.	DESCRIPTION	NO. REQ'D
Fasteners			
	F002	10-24 Keps Nut	6
	F004	1/4-20 Keps Nut	6
	F009	5/16-18 Whiz Locknut	10
	F025	10-24 x 3/8 PPHMS	6
	F031	1/4-20 x 5/8 Hex Bolt	3
	F034	5/16-18 x 3/4 Hex Bolt	8
	F178	1/4 x 1 Fender Washer	3
	F390	1/4-20 x 7/8 Carriage Bolt	2
	F477	1/4-20 x 5/8 Carriage Bolt	1

NOTE: Rear Bumper Assembly for GHS Models is not shown here. Refer to **BODY / CHASSIS ASSEMBLY,** Page 4.

REAR BODY ASSEMBLY

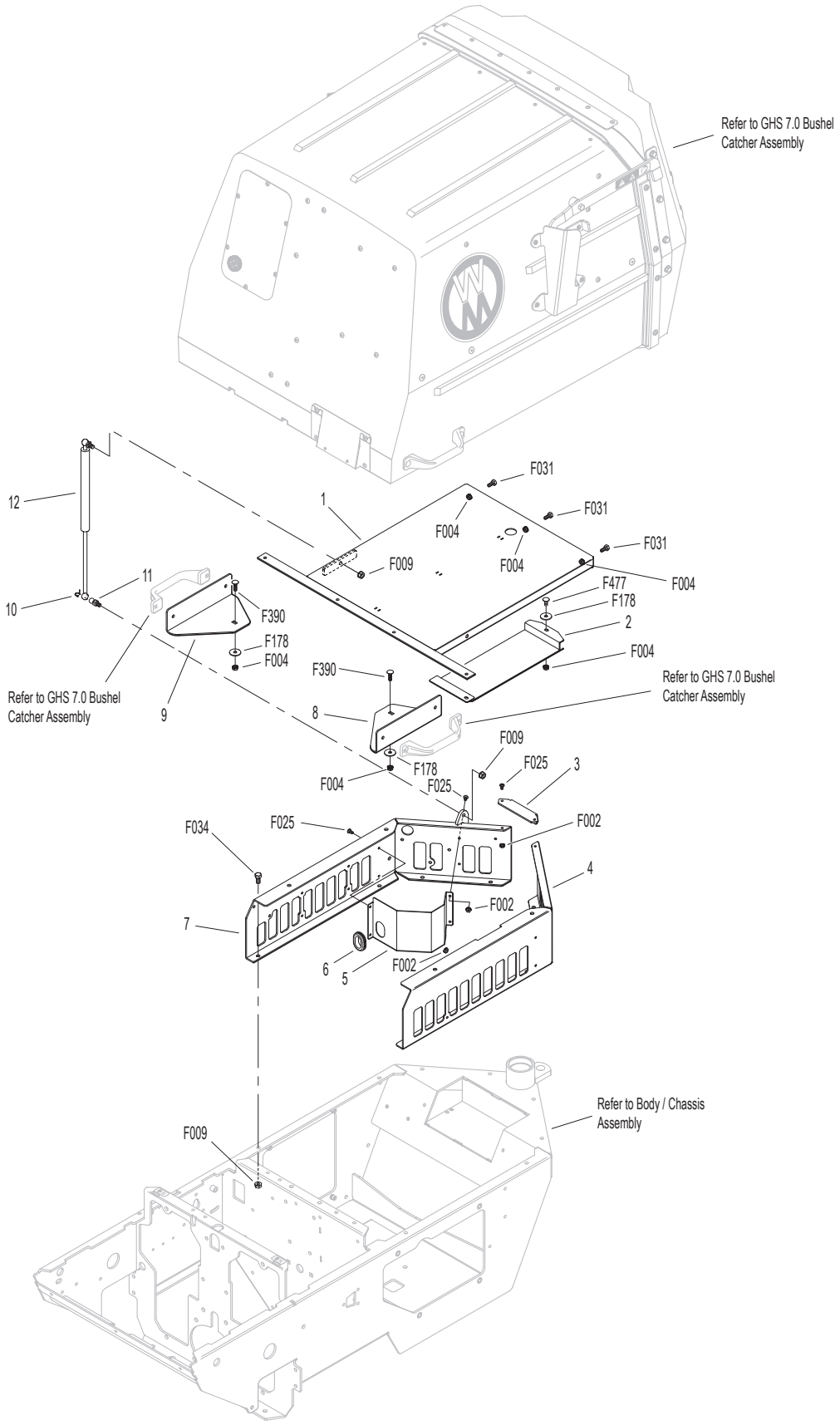

MAIN COMPONENT POWER TRANSMISSION

ITEM NO.	PART NO.	DESCRIPTION	NO. REQ'D
PTO Drive Assembly			
1	4850	Handle Grip, Black	1
2	6358-29	Clutch Lever	1
3	5830	Grease Fitting	2
4	4303-7	Clutch Actuator Bolt (5/16)	1
5	7380	Knuckle Joint	1
6	5830-4	Grease Fitting (90 Degree)	1
7	2358-6	5/16-18 x 1-3/4 Stud	2
8	5103-2	Pivot Bushing (5/16 ID)	2
9	6325-5	Clutch Arm	1
10	7377	Plastic Washer (1 x .438 x .025)	2
11	7378	Pivot Bearing (7/16 x 9/16)	1
12	5214-3	Ball Joint (5/16-24LH) (Nylon Lined)	1
13	6325-6	Clutch Arm Support Bracket	1
14	6410-3	Clutch Pull Rod 8-5/8	1
15	5214-2	Ball Joint (5/16-24) (Nylon Lined)	1
16	5221	Extension Spring (3/4 x 4)	1
17	5214-4	Ball Joint (5/16-24) W/O Stud	1
18	5226-1	Spring (3/4 x 2-1/2)	1
19	5247-2	V-Groove Idler (4")	2
20	5234-4	PTO Drive Belt	1
21	9051	Washer (5/16 x 1-3/8)	1
22	5238-22	PTO Drive Pulley (5/B)	1
23	5830-3	Grease Fitting (45 Degree)	1
24	6358-4	PTO / Clutch / Brake Actuator (Includes Items # 23 & 28)	1
25	5300-11	Guide Top	1
26	5300-12	Belt Guide Base	1
27	6358-6	PTO / Clutch / Brake Support	1
28	7201-3	Fiberglide Bearing	2
29	7201-5	Inner Race (2-1/4)	1
30	5303-3	Belt Guide Mount	1
Engine Belt Tightener Assembly			
31	5843-2	Clutch Spacer Washer (1.375 x .375 x .250)	1
32	5240-1	Compound Pulley, 4/B (Includes Items # F135 & F171)	1
33	5234-6	Engine Drive Belt (BX30-K)	1
34	5103-8	Bushing .500 x .3125 x 1.655-.660	1
35	5495-11	Engine Idler Arm (Includes Item # 3)	1
36	5221-1	Extension Spring (3/4 x 5)	1
37	5237-6	Engine Pulley (4-1/4B) (Includes Items # F066 & F171)	1
38	5237-10	Spacer (1.375 x 1.0 x 5/16)	1
39	5268	Bearing W/Collar (3/4)	2
40	6394-1	Jackshaft Bearing Housing	1
41	6273-1	Jackshaft (3/4 x 11.750)	1

ITEM NO.	PART NO.	DESCRIPTION	NO. REQ'D
Blower Brake Assembly			
42	7523-2	Clevis Pin W/Hole (1/4 x 5/8)	1
43	8304	Brake Band (14-1/2)	1
44	4359-1	Brake Band Link, Front	2
Fasteners			
	F004	1/4-20 Keps Nut	7
	F005	1/4-20 ESNA Nut	1
	F009	5/16-18 Whiz Locknut	11
	F010	5/16-24 ESNA Nut	3
	F012	3/8-16 Keps Nut	1
	F019	1/4-20 ESNA Wing Nut	2
	F024	5/16-24 Jam Nut	2
	F029	1/4-20 x 1/2 Hex Bolt	1
	F031	1/4-20 x 5/8 Hex Bolt	6
	F034	5/16-18 x 3/4 Hex Bolt	3
	F035	5/16-18 x 1-1/4 Hex Bolt	1
	F040	3/8-16 x 1-1/2 Hex Bolt	2
	F049	5/16 SAE Washer	1
	F050	1/4 SAE Washer	2
	F051	3/8 SAE Washer	1
	F054	AN960616 Washer	2
	F060	AN960516 Washer	2
	F061	1/4 Star Lock Washer	1
	F063	3/8 Int. Star Lock Washer	2
	F066	1/4 x 1/4 x 3/4 Key	1
	F067	3/16 x 3/16 x 1 Key	1
	F069	3/32 x 1/2 Cotter Pin	1
	F093	5/16-18 x 1 Hex Bolt	2
	F106	3/8-16 x 5/8 Hex Bolt	2
	F135	3/16 x 3/16 x 1-3/4 Key	1
	F171	5/16-18 x 3/8 Set Screw	4
	F178	1/4 x 1 Fender Washer	1
	F183	.312 x .700 x .074 Washer	1
	F241	.375 x .875 x .10 Washer	1
	F316	5/16-18 x 1-3/4 Hex Bolt	1
	F350	1/4-20 LP Nylock	1
	F373	5/16-24 Hex Nut, LH	1
	F393	3/8-16 x 3-1/4 Hex Bolt	1
	F477	1/4-20 x 5/8 Carriage Bolt	2
	F535	5/16-24 x 2-1/2 Hex Bolt	1
	F594	3/8-24 x 1 Hex Bolt	1

Beginning S/N 147007
Use only genuine **Walker**® replacement parts.

MAIN COMPONENT POWER TRANSMISSION

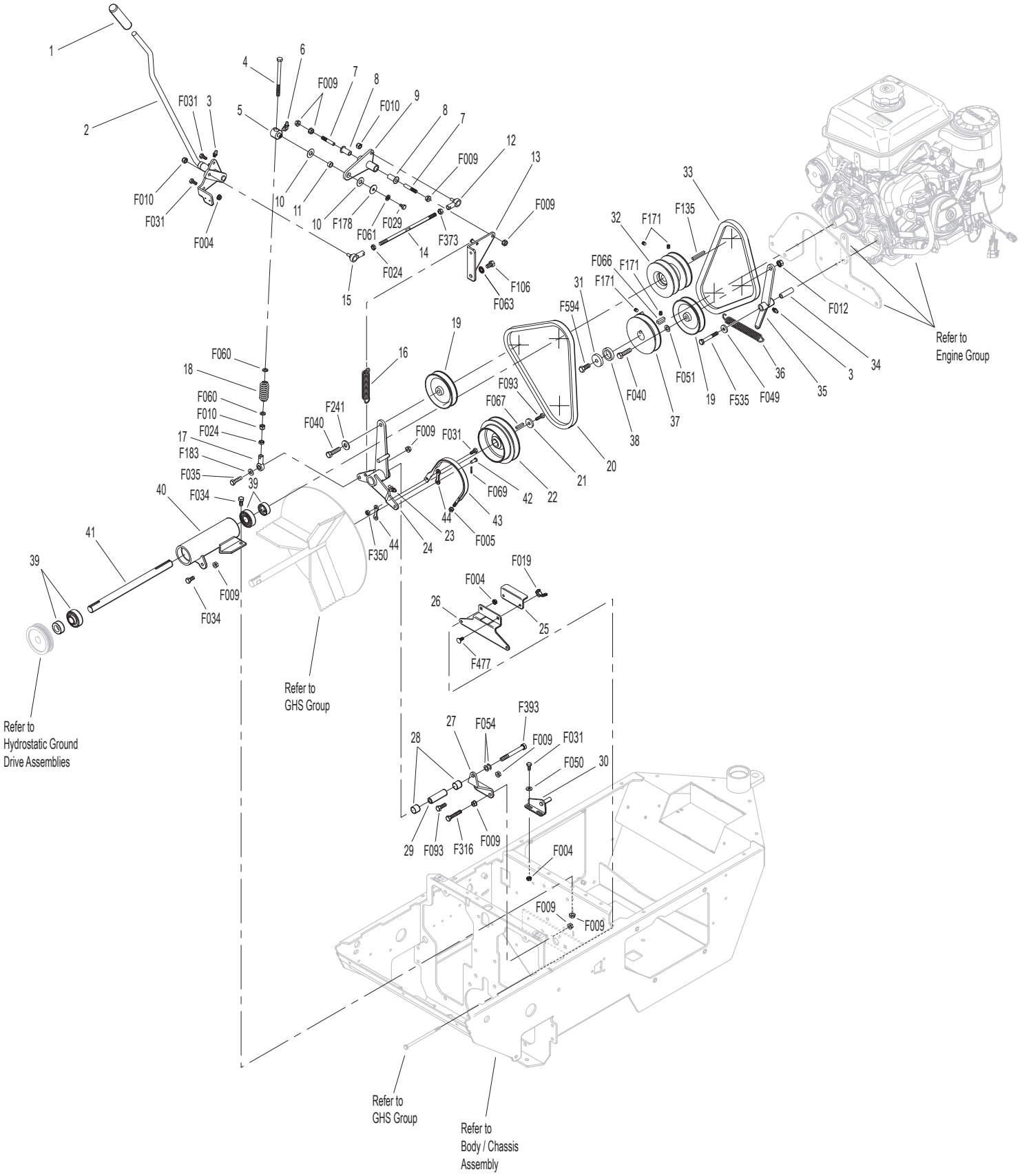

ENGINE GROUP

ITEM NO.	PART NO.	DESCRIPTION	NO. REQ'D
Fuel Assembly			
1	5879-4	Hose Clamp (7/16)	1
2	5832	Cable Clamp (1/2)	3
3	M113	Fuel Line (3/16 x 10")	1**
4	8046-17	Quick Coupler Straight (5/16 x 5/16)	1
5	5879-9	Stepless Ear Clamp, Black (15.7)	2
6	NS	Fuel Line (Kohler)	1
7	8046-16	Quick Connecter (5/16 x 5/16-45)	1
8	6833	Cable Clamp (9/16 x #10)	1
9	NS	Fuel Valve (Kohler)	1
10	5879-3	Hose Clamp (1/2)	7
11	5020	Fuel Filter	1
12	5835-3	Cable Clamp (1/2) .218 Hole	4
13	M246	Fuel Line (1/4 x 33")	1**
14	NS	Fuel Line (Kohler)	1
15	M111	Fuel Line (1/4 x 10")	1**
16	M246	Fuel Line (1/4 x 17")	1**
17	NS	Pump, Pulse	1
18	8018-6	1" Spacer	2
19	NS	Fuel Pump Module (Kohler)	1
20	8018-2	Fuel Bracket Spacer	3
Engine Assembly			
21	NS	14 HP Engine (Kohler) EFI	1
22	NS	Air Cleaner Cartridge (Kohler)	1
23	5303-7	Engine Spacer	1
24	5013-19	Exhaust Pipe Heat Shield	1
25	5013-20	Heat Shield Cover	1
26	5303-9	Engine Brace	1
Throttle Assembly			
27	8108-4	Throttle Cable	1
28	5108-19	Control Lever, Throttle and Choke	1
29	5108-5	Throttle Control Knob, Red	1
30	7108-13	Control Assembly (Includes Items # 28, 31-33 & F201)	*
	5121-4	Throttle Control and Cable Assembly (Complete Control and Cable Assembly)	*
31	5108-8	Control Bracket	1
32	5108-10	Friction Washer (.125)	1
33	5108-7	Control Lock Tab	1
34	5172	Bearing, Delrin (.255 x .379 x .250)	1

ITEM NO.	PART NO.	DESCRIPTION	NO. REQ'D
Exhaust Assembly			
35	5013-18	Inner Heat Shield	1
36	NS	Gasket, Muffler (Kohler)	1
37	NS	Sensor, Oxygen (Kohler)	1
38	5011-17	Muffler	1
39	5013-17	Muffler Heat Shield	1
40	NS	Nut (Kohler)	2
Fasteners			
	F002	10-24 Keps Nut	17
	F004	1/4-20 Keps Nut	5
	F005	1/4-20 ESNA Nut	1
	F009	5/16-18 Whiz Locknut	4
	F013	3/8-16 Whiz Locknut	4
	F025	10-24 x 3/8 PPHMS	13
	F026	10-24 x 1/2 PPHMS	2
	F031	1/4-20 x 5/8 Hex Bolt	2
	F034	5/16-18 x 3/4 Hex Bolt	4
	F040	3/8-16 x 1-1/2 Hex Bolt	2
	F041	3/8-16 x 1-3/4 Hex Bolt	2
	F044	5/16-24 x 3/4 Hex Bolt	2
	F050	1/4 SAE Washer	5
	F051	3/8 SAE Washer	4
	F052	5/16 Ext. Star Lock Washer	2
	F164	10-24 x 1/4 x 3/8 SHL Bolt	1
	F184	1/4-20 x 1/2 Hex Bolt, SS	4
	F185	1/4 Internal Star Lock Washer, SS	4
	F201	1/4 Belleville Spring Washer	2
	F236	1/4-20 x 1-3/4 Hex Bolt	1
	F398	1/4-20 x 2 Hex Bolt	3
	F569	1/4-20 Flange Top Lock Nut	1

* Service Part Only

** **Required hose specifications:**

M111 - 1/4" ID fuel/oil/vapor hose (Gates 4219-0103 or equivalent)
M113 - 3/16" ID fuel/oil/vapor hose (Gates 4219-0093 or equivalent)
M246 - 1/4" ID low permeation (<15g/m^2/day) fuel hose (Parker 38904 or equivalent)
M247 - 5/16" ID low permeation (<15g/m^2/day) fuel hose (Parker 38905 or equivalent)

ENGINE GROUP

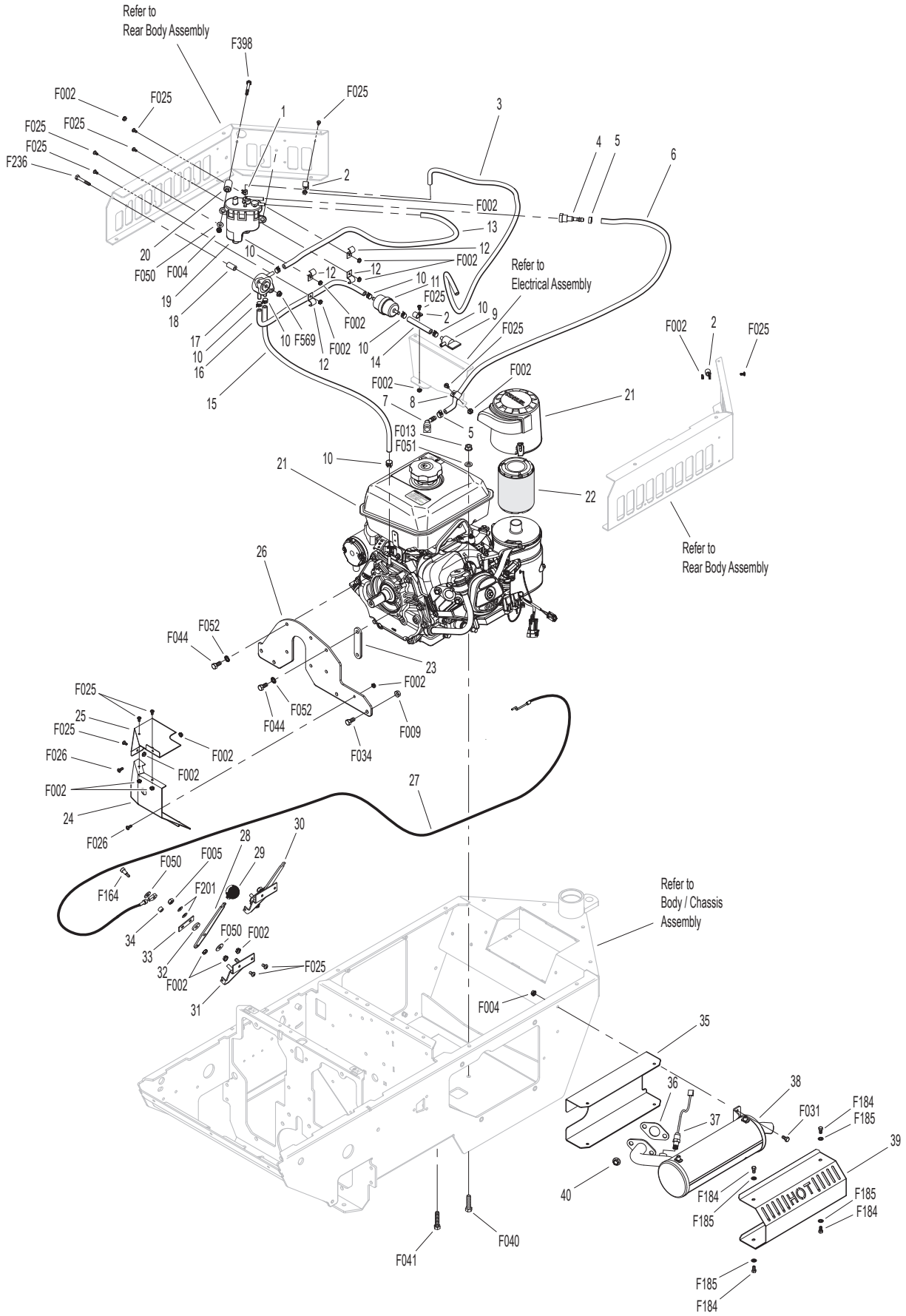

HYDROSTATIC GROUND DRIVE ASSEMBLIES

ITEM NO.	PART NO.	DESCRIPTION	NO. REQ'D
Transaxle Reservoir Assembly			
1	2025-1	Oil Expansion Reservoir (71327)	1
2	4025-2	Reservoir Bottle Mount	1
3	5879-8	Hose Clamp (1/3/16)	3
4	2025-8	Reservoir Bottom Caps	1
5	4025-3	Elbow (1/4 x 1/2)	1
6	5879-3	Hose Clamp (1/2)	4
7	M111	Hose (1/4 x 14")	1**
8	2025-17	Straight Thread Hose Fitting	2
9	5879-4	Hose Clamp (7/16)	2
10	M111	Hose (1/4 x 6-5/8")	1**
11	8043-9	1/4 x 1/4 x 1/4 Tee	1
12	M111	Hose (1/4 x 1-5/8")	1**
13	7364-9	Reservoir Hose Guide	1
14	5087-1	Hose (1/2 x 1-3/4)	1
Ground Drive Assemblies			
15	5026-14	Hydro-Gear ZT3100, RH	1
16	2028-6	Lockout Arm, RH	1
17	4407-4	Bow Tie Cotter Pin	3
18	7364-3	Idler Spring Bushing	1
19	7364-2	Torsion Spring	1
20	6345-4	Idler Arm	1
21	5025-18	Hydro Fan Washer	2
22	5025-17	Hydro Fan	2
23	7244-21	Hydro Pulley (4.075) Splined	2
24	5025-19	Hydro Fan Nut	2
25	7241-2	Transmission Drive Pulley (3-1/4MV) (Includes Items # F067 & F171)	1
26	5232-1	Ground Drive Belt (Micro V)	1
27	5245-1	Idler Pulley	1
28	6325-2	Spacer Bushing (5/16)	1
29	2028-5	Lockout Arm, LH	1
30	5025-14	Hydro-Gear ZT3100, LH	1
31	9430-1	Spacer Tube	4
32	6215	Shock Mount / Body Lift Arm (Includes Item # 33)	1
33	5830	Grease Fitting	2
Parking Brake Assembly			
34	7406-1	Handle Grip, Red	1
35	6406-6	Parking Brake Lever (Includes Item # 33)	1
36	6406-1	Brake Actuator Pull	1
37	2280	Clevis (3/8)	1
38	6406-2	Parking Brake Pull Rod	2
39	8655-4	Clevis Pin (5/16 x 3/4)	5
40	6406-4	Parking Brake Pull Mount, Inner	2
41	6406-5	Parking Brake Pull Mount, Outer	2
42	5665-1	Compression Spring (2-1/2)	2
43	5222	Extension Spring (1/2 x 3-1/4)	2
44	6406-3	Parking Brake Actuator	1
45	2406-4	Clevis Pin (5/16 x 1-1/8)	1
Wheel Assembly			
46	5033-6	Wheel & Tire (18 x 7.00-8)	2
Fasteners			
	F004	1/4-20 Keps Nut	7
	F005	1/4-20 ESNA Nut	2
	F009	5/16-18 Whiz Locknut	8
	F013	3/8-16 Whiz Locknut	5
	F015	1/2-20 Wheel Lug Nut	8
	F020	5/16-18 ESNA Nut	2
	F029	1/4-20 x 1/2 Hex Bolt	1
	F031	1/4-20 x 5/8 Hex Bolt	9
	F034	5/16-18 x 3/4 Hex Bolt	2
	F041	3/8-16 x 1-3/4 Hex Bolt	1
	F042	3/8-16 x 2-1/4 Hex Bolt	2
	F050	1/4 SAE Washer	2
	F067	3/16 x 3/16 x 1 Key	1
	F069	3/32 x 1/2 Cotter Pin	5
	F129	10-24 x 1/2 PTHMS	2
	F171	5/16-18 x 3/8 Set Screw	2
	F182	1/4 x 5/8 x 1/8 Washer	2
	F183	.312 x .700 x .074 Washer	2
	F316	5/16-18 x 1-3/4 Hex Bolt	1
	F336	3/8-16 Jam Nut	1
	F388	3/8-16 x 2-1/2 Hex Bolt	2
	F489	Washer 1/4 x 7/8 x .090	1
	F529	Washer 1.0 OD x .515 ID x 1/8	2
	F533	5/16-18 x 3-1/2 Socket Cap Bolt	4

* Service Part Only

** **Required hose specifications:**

M111 - 1/4" ID fuel/oil/vapor hose (Gates 4219-0103 or equivalent)

Beginning S/N 147007
Use only genuine **Walker**® replacement parts.

HYDROSTATIC GROUND DRIVE ASSEMBLIES

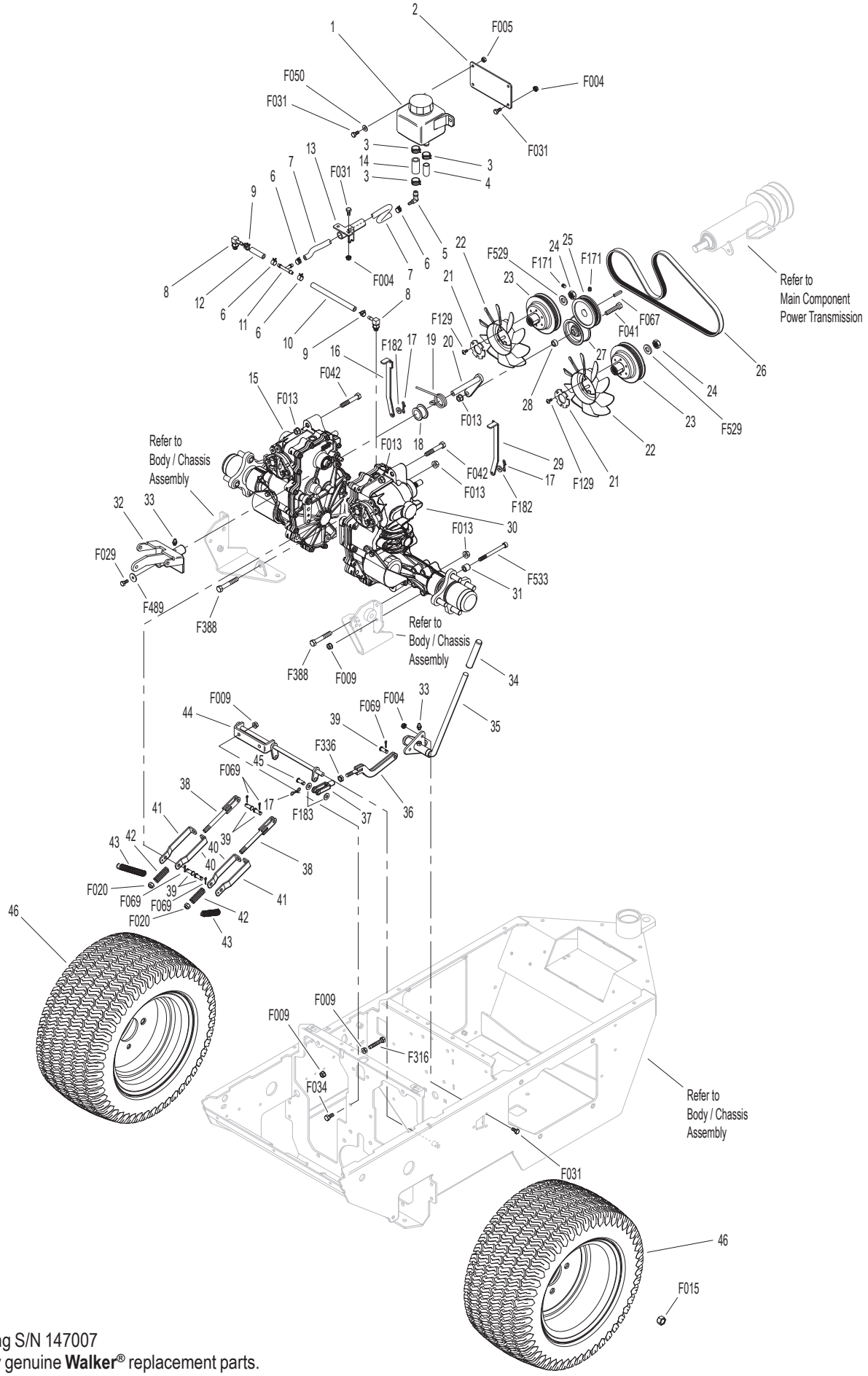

STEERING CONTROL ASSEMBLIES

ITEM NO.	PART NO.	DESCRIPTION	NO. REQ'D
Steering Lever & FSC Assemblies			
1	5862	FSC Knob	1
2	4170	FSC Lever Assembly (Includes Item # 4)	*
3	2170-1	Step Washer	1
4	5830	Grease Fitting	1
5	5214-5	Ball Joint (5/16-24/LH) W/O Stud	1
6	4173-2	Control Rod (4-15/16)	1
7	5214-4	Ball Joint (5/16-24) W/O Stud	3
8	4219	Extension Spring (3/4 x 6-1/2)	1
9	4451-9	FSC Friction Actuator	1
10	8201-3	Fiberglide Bearing	4
11	6451-2	Speed Control Actuator, RH (Includes Items # 10 & 13)	1
12	4452-6	Steering Pivot (1/4-20 x 1-5/8)	2
13	5830-3	Grease Fitting (45 Degree)	2
14	5146	10mm Ball Stud	4
15	4199-2	Steering Lever Dampener Assembly	2
16	5463-6	Washer 5/16 x 3/4 x .250	2
17	5463-5	Steering Arm Pivot Sleeve	2
18	7201-2	Fiberglide Bearing (1/2")	2
19	5463-4	Steering Lever Actuator	2
20	5665-1	Compression Spring (2-1/2)	2
21	4213-2	Control Rod (6-3/4)	2
22	2212-3	Seal Retainer	2
23	2212	Transmission Control Arm Stop	2
24	6212-2	Transmission Control Arm, RH	1
25	6212-3	Transmission Control Arm, LH	1
26	6451-1	Speed Control Actuator, LH (Includes Items # 10 & 13)	1
27	4451-1	Steering Pivot Shaft W/Stop	1
28	9704-3	Pivot Rod Bushing / Plastic	2
29	4142-2	FSC Friction Washer (1-1/2 x 1-1/32 x 1/16)	1
30	5141	FSC Friction Washer (1-1/2 x 3/8 x 1/16)	1
31	4142-1	FSC Cam	1
32	5222	Extension Spring (1/2 x 3-1/4)	2
33	5450	D-Clip	2
34	6452-1	Steering Lever Tube W/Tab	2
35	5453-10	Steering Lever Handle / Adjustable (Includes Items # 36 & F345)	2
36	5850-2	Handle Grip, Foam (5-1/2)	2

ITEM NO.	PART NO.	DESCRIPTION	NO. REQ'D
Fasteners			
	F004	1/4-20 Keps Nut	2
	F005	1/4-20 ESNA Nut	2
	F009	5/16-18 Whiz Locknut	8
	F010	5/16-24 ESNA Nut	2
	F024	5/16-24 Jam Nut	3
	F035	5/16-18 x 1-1/4 Hex Bolt	1
	F044	5/16-24 x 3/4 Hex Bolt	2
	F059	3/8 Wave Spring Washer	1
	F093	5/16-18 x 1 Hex Bolt	4
	F146	1/4-20 Jam Nut	2
	F167	5/16-18 Hex Nut	1
	F183	.312 x .700 x .074 Washer	8
	F188	1/4-20 Self-Locking Nut	4
	F192	3/8-24 Self-Locking Nut	1
	F198	.250 x .625 x .040 Washer, SS	2
	F211	1/4-20 x 7/8 Hex Bolt	1
	F226	5/16-18 x 7/8 Hex Bolt	2
	F312	3/8 x 3/8 Shoulder Bolt	1
	F345	1/4-20 x .770 Knurled Bolt	4
	F373	5/16-24 Hex Nut, LH	1
	F385	1/4 x 1-1/4 Roll Pin	1
	F386	5/16-18 x 1-1/2 x 3/8 Shoulder Bolt	1
	F391	1/4-20 x 1/2 Set Screw, SS	2
	F407	Belleville Washer 3/8 x 1.187, SS	1
	F427	5/16-18 Flange Nut	1

* Service Part Only

Beginning S/N 147007
Use only genuine **Walker**® replacement parts.

STEERING CONTROL ASSEMBLIES

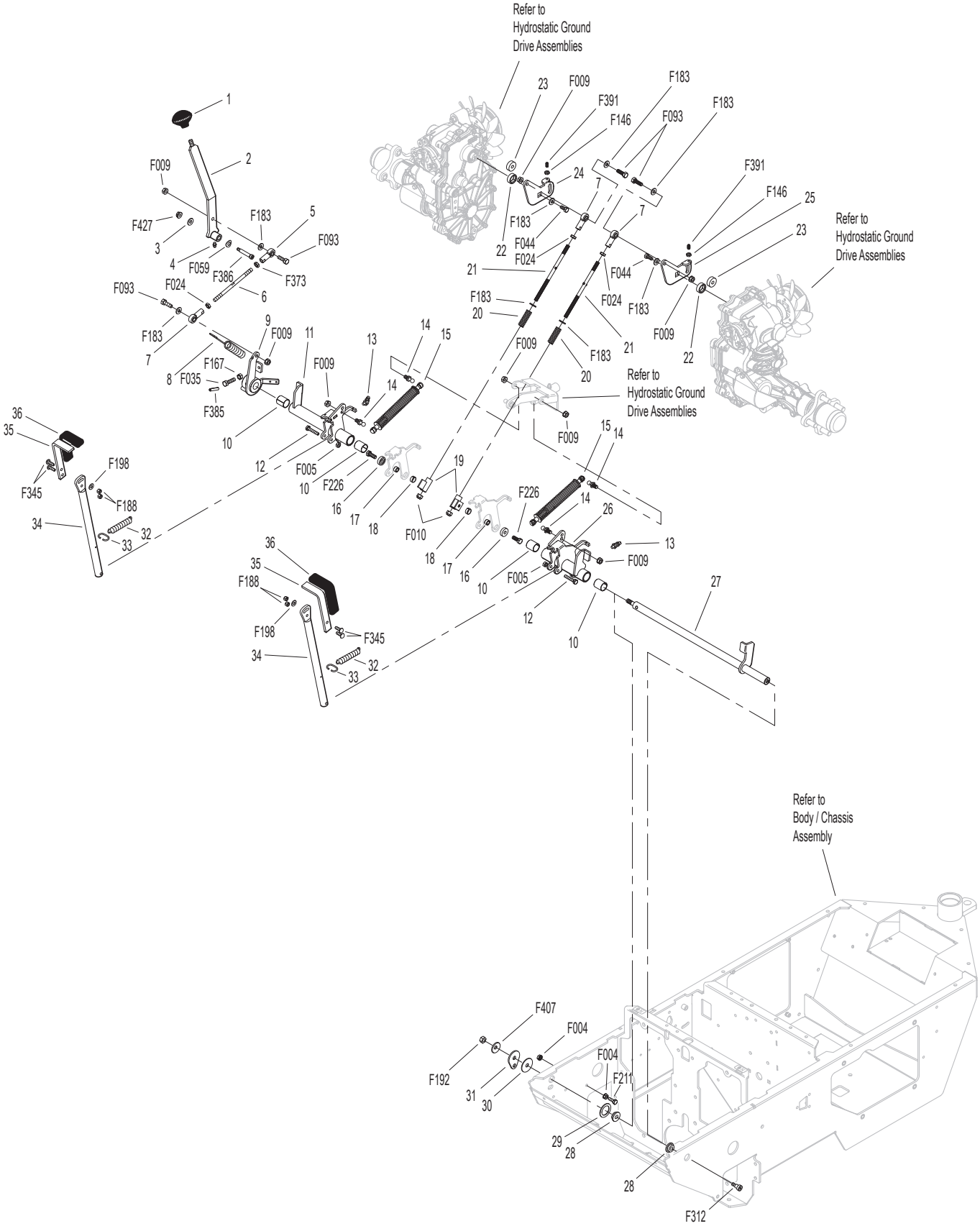

GHS GROUP

ITEM NO.	PART NO.	DESCRIPTION	NO. REQ'D
Delivery Chute Assembly			
1	5515-4	Elbow Delivery Spout	1
2	5592-24	Backing Plate, Grass-Pak® Switch	1
3	5592-23	Grass-Pak® Housing Spacer	1
4	5578-1	Rear Clip Notched, Chute Mount	1
5	5577	Side Clip, Chute Mount	2
6	6530-6	Body Chute	1
7	7511-5	Outside Chute Cover Lip	1
8	7511-4	Inside Chute Cover Lip	1
9	7511-2	7.0 Delivery Chute W/Clips (Includes Items # 4, 5, F079 & F411)	1
Blower Assembly			
10	6543-5	Blower Scroll	1
11	6349-2	Flanged Bearing (3/4")	1
12	6349-1	Sleeve .3150 x .375 x 3/8	2
13	6349-3	Flange Bearing (3/4") Machine Flat	1
14	5526-9	Receiver Cone	1
15	5275-14	U-Joint Tube/9.5" OAL Spline (Includes Item # F076)	1
16	6545-6	Blower Spacer	1
17	6545-5	Blower Wheel	1
18	6543-8	Blower Faceplate	1
19	5794-6	Fixed Chute	1

ITEM NO.	PART NO.	DESCRIPTION	NO. REQ'D
Fasteners			
	F002	10-24 Keps Nut	6
	F004	1/4-20 Keps Nut	14
	F013	3/8-16 Whiz Locknut	2
	F025	10-24 x 3/8 PPHMS	4
	F031	1/4-20 x 5/8 Hex Bolt	2
	F032	1/4-20 x 3/4 Hex Bolt	4
	F038	3/8-16 x 1 Hex Bolt	2
	F050	1/4 SAE Washer	4
	F067	3/16 x 3/16 x 1 Key	1
	F076	3/8-16 x 5/8 SQH Set Screw	1
	F079	A/A66D Aluminum Pop Rivet	14
	F169	5/16-18 x 1 Carriage Bolt	2
	F411	3/16 Bulbex Rivet	6
	F531	1/4-20 x 5 Hex Bolt	11
	F532	1/4-20 x 5-1/2 Hex Bolt	1
	F551	5/16-18 Flange Top Lock Nut	2
	F577	10-24 x 5/8 Carriage Bolt	2

NOTE: Refer to **ELECTRICAL CONNECTORS,** Page 26, for identification of all Electrical Wiring Service Parts.

GHS GROUP

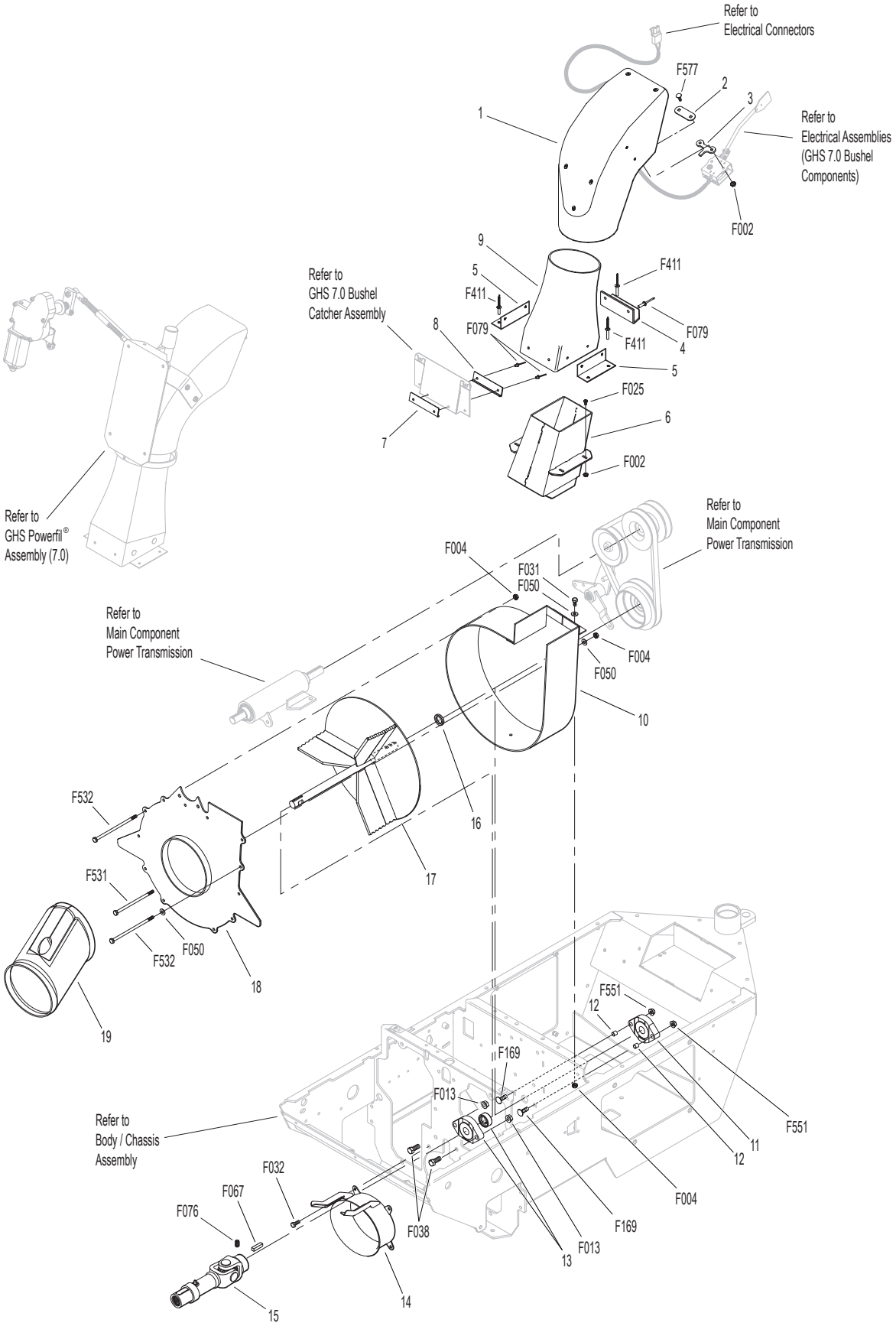
Refer to
Electrical Connectors
F577
2
3
1
Refer to
Electrical Assemblies
(GHS 7.0 Bushel
Components)
F002
9
5
F411
Refer to
GHS 7.0 Bushel
Catcher Assembly
F411
8
F079
F411
F079
4
5
F025
6
7
F002
Refer to
GHS Powerfil®
Assembly (7.0)
Refer to
Main Component
Power Transmission
F004
F031
F050
Refer to
Main Component
Power Transmission
F004
F050
10
F532
16
17
F531
F050
F532
18
19
F551
12
F169
F013
Refer to
Body / Chassis
Assembly
F551
11
12
F032
F067
F004
F076
F038
F169
F013
13
14
15

GHS POWERFIL® ASSEMBLY (7.0)

7.0 GHS Powerfil® Assembly

ITEM NO.	PART NO.	DESCRIPTION	NO. REQ'D
1	5552	Ball Joint (1/4-28)	2
2	5553-3	Bushing, Powerfil® Actuator	4
3	5553-1	Compression Spring (1/2 x 2)	2
4	5558-2	Powerfil® Actuator Rod	1
	5549	Actuator Rod Assembly (Includes Items # 1-5 & F003)	*
5	5558-1	Powerfil® Push Rod	1
6	5551-3	Bearing Cap, Powerfil®	1
7	5551-1	Pivot Bearing (#S3PP)	2
8	5518-2	Pivot, Delivery Spout	1
9	5517-2	Pivot Mount	1
10	5519-5	Actuator Motor (12V) (Includes Items # 11 & 12)	1
11	5519-2	Motor Mount Washer	*
12	5519-3	Motor Mount Nut (5/8-24)	*
13	5554	Actuator Arm	1

Fasteners

ITEM NO.	PART NO.	DESCRIPTION	NO. REQ'D
	F002	10-24 Keps Nut	10
	F003	1/4-28 Hex Nut	3
	F026	10-24 x 1/2 PPHMS	1
	F037	10-24 x 5/8 PTH Screw	2
	F054	AN960616 Washer	1
	F085	3/16 Rivet Backup Washer	1
	F101	10-24 x 1-1/4 SHC Screw	1
	F109	1/8 x 5/8 Roll Pin	1
	F129	10-24 x 1/2 PTHMS	6
	F261	AN960616L Washer	1
	F287	1/4-28 Keps Nut	1

* Service Part Only

Beginning S/N 147007
Use only genuine **Walker**® replacement parts.

GHS POWERFIL® ASSEMBLY (7.0)

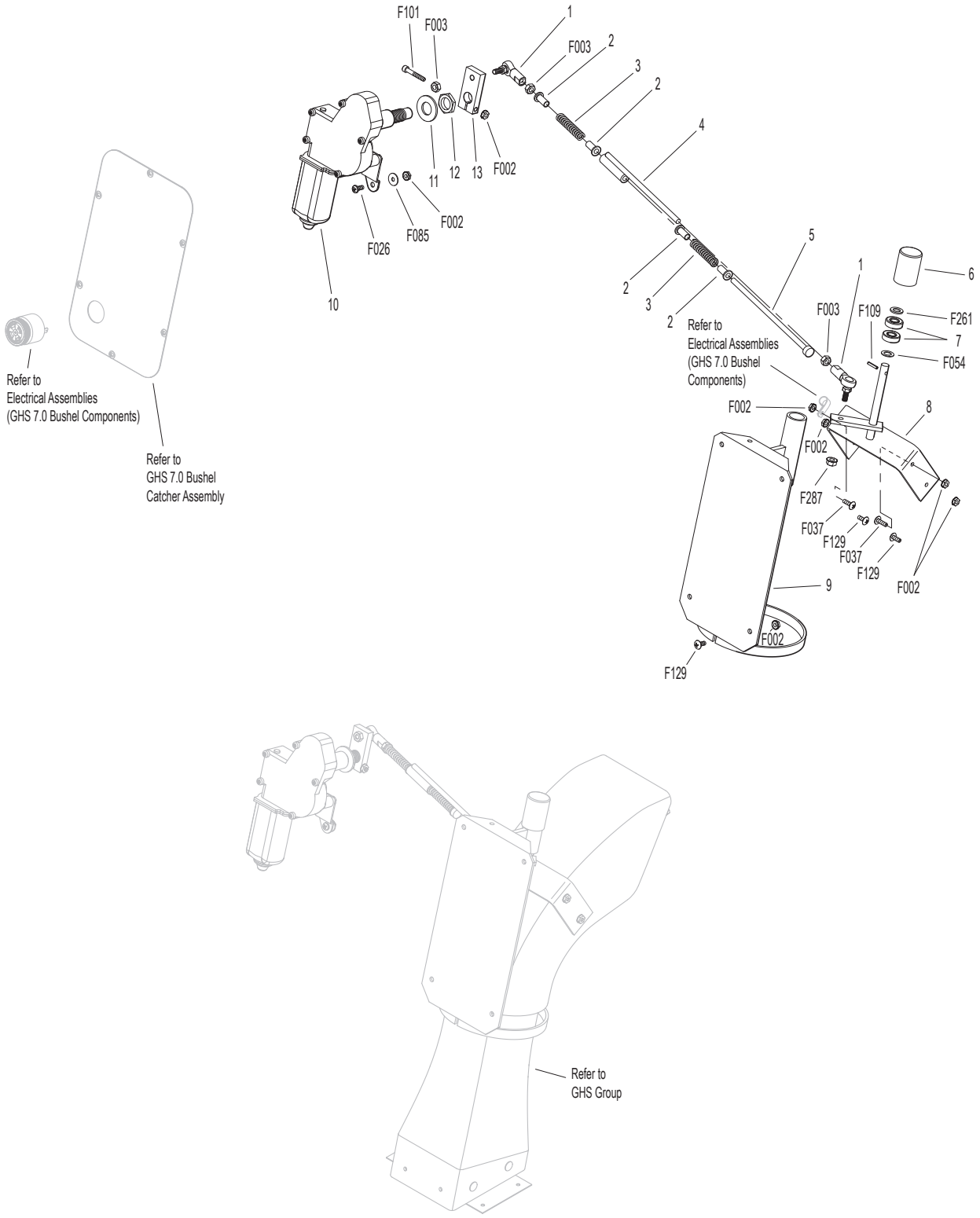

GHS 7.0 BUSHEL CATCHER ASSEMBLY

ITEM NO.	PART NO.	DESCRIPTION	NO. REQ'D
Upper Baffle Screen Assembly (Removable)			
1	7512-6	Removable Screen (3/16 Hole) (Includes Items # 2, F025 & F190)	1**
2	7506	Knob / Threaded Insert (10-24)	2
3	7509-2	Channel Top	2
4	8606-2	Channel Bottom	2
5	6856-1	Edge Molding (21-3/4")	1
6	6507	Screen Seal (23-1/4")	1
7	7505	Mustache Spring	2
8	7509-6	C-Channel With Spring (Includes Items # 7 & F340)	1
7.0 Exhaust Deflector Door Assembly			
9	7607-3	Upper Door Seal	1
10	7510-4	7.0 Catcher Box Door (Includes Frame) (Includes Items # 9, 11, 12, 14, F079, F085, F330 & F411)	1
11	5583	Handle	1
12	7607-6	Lower Door Stiffener (7.0)	1
13	8607-8	Door Guide	1
14	7607-5	Upper Door Stiffener	1
GHS 7.0 Bushel Catcher Assembly			
15	7503-7	Center Strap (7.0)	1
16	7503-6	Upper Frame Doubler (7.0)	2
17	7503-5	Lower Frame Doubler (7.0)	2
18	7503-4	Outside Box Strap (7.0)	2
19	8608-11	Catcher Door Finger	1
20	8608-4	Center Frame Doubler	1
21	7503-11	Catcher Mount	1
22	7610-4	Catcher Dump Flap Spacer (7.0)	1
23	7610-8	Catcher Dump Flap With Plate	1
24	8610-3	Backing Plate / Dump Flap	1
25	7620-3	Pivot Bushing (1/2 x 9/16)	4
26	7607-7	Bushing	2
27	7608-3	Hinge Plate, LH	1
28	7607-15	Catcher Door Arm, LH	1
29	8155-7	7.0 Gas Spring Cover, LH	1
30	5147	Spring Clip	4
31	5155-5	Gas Spring	2
32	5155-13	3/4 Ball Stud	2
33	5523-6	Gas Spring Plate	2
34	5155-12	5/16 Ball Stud	2
35	5155-15	Box Support, Gas Spring	2
36	7532-1	Handle, Catcher Lift	2
37	7511-6	Chute Cover	1
38	7557-1	7.0. Wire Harness Channel	1
39	7510-3	7.0 Bushel Catcher Box	1
	7502-6	7.0 Catcher W/Powerfil® (Includes Door)	*
40	7607-8	Powerfil® Cover Plate	1
41	7608-4	Hinge Plate, RH	1
42	8155-8	7.0 Gas Spring Cover, RH	1
43	7607-14	Catcher Door Arm, RH	1
44	7584-3	Reinforcing Strap	1
45	5801-3	Decal Plate, Round (Set of 2)	1
46	7608-5	Door Arm Stop	2

5598-2 Optional Dump Bag (Not Shown)
May be ordered as an option. Contact your Walker dealer.

Fasteners

F002	10-24 Keps Nut	23
F004	1/4-20 Keps Nut	15
F009	5/16-18 Whiz Locknut	2
F020	5/16-18 ESNA Nut	2
F025	10-24 x 3/8 PPHMS	6
F027	10-24 x 5/8 PPHMS	12
F029	1/4-20 x 1/2 Hex Bolt	4
F049	5/16 SAE Washer	4
F050	1/4 SAE Washer	6
F079	A/A66D Aluminum Pop Rivet	4
F085	3/16 Rivet Backup Washer	4
F094	8-32 x 1/2 PTHMS	6
F129	10-24 x 1/2 PTHMS	14
F178	1/4 x 1 Fender Washer	4
F190	#10 Internal Star Lock Washer	2
F196	1/4-20 x 1 PPHMS, SS	4
F230	1/4-20 x 1-1/4 PPHMS, SS	4
F242	1/4-20 x 7/8 PPHMS, SS	10
F275	5/16-18 x 2 Hex Bolt	2
F330	3/16D x 21/32L Rivet, SS	4
F340	Rivet, Aluminum	4
F351	Aluminum Pop Rivet	6
F360	1/4-20 x 3/8 Hex Bolt	2
F390	1/4-20 x 7/8 Carriage Bolt	4
F411	3/16 Bulbex Rivet	32
F477	1/4-20 x 5/8 Carriage Bolt	4
F504	1/4-20 Whiz Locknut	12
F524	3/16 x 3/8 Aluminum Rivet, Black	6
F540	1/4-20 x 1-3/4 PPHMS, SS	1

* Service Part Only

** This screen can be replaced by P/N 7512-7 Removable Screen (3/4" holes) for improved air flow performance in wet conditions.

Beginning S/N 147007
Use only genuine **Walker**® replacement parts.

GHS 7.0 BUSHEL CATCHER ASSEMBLY

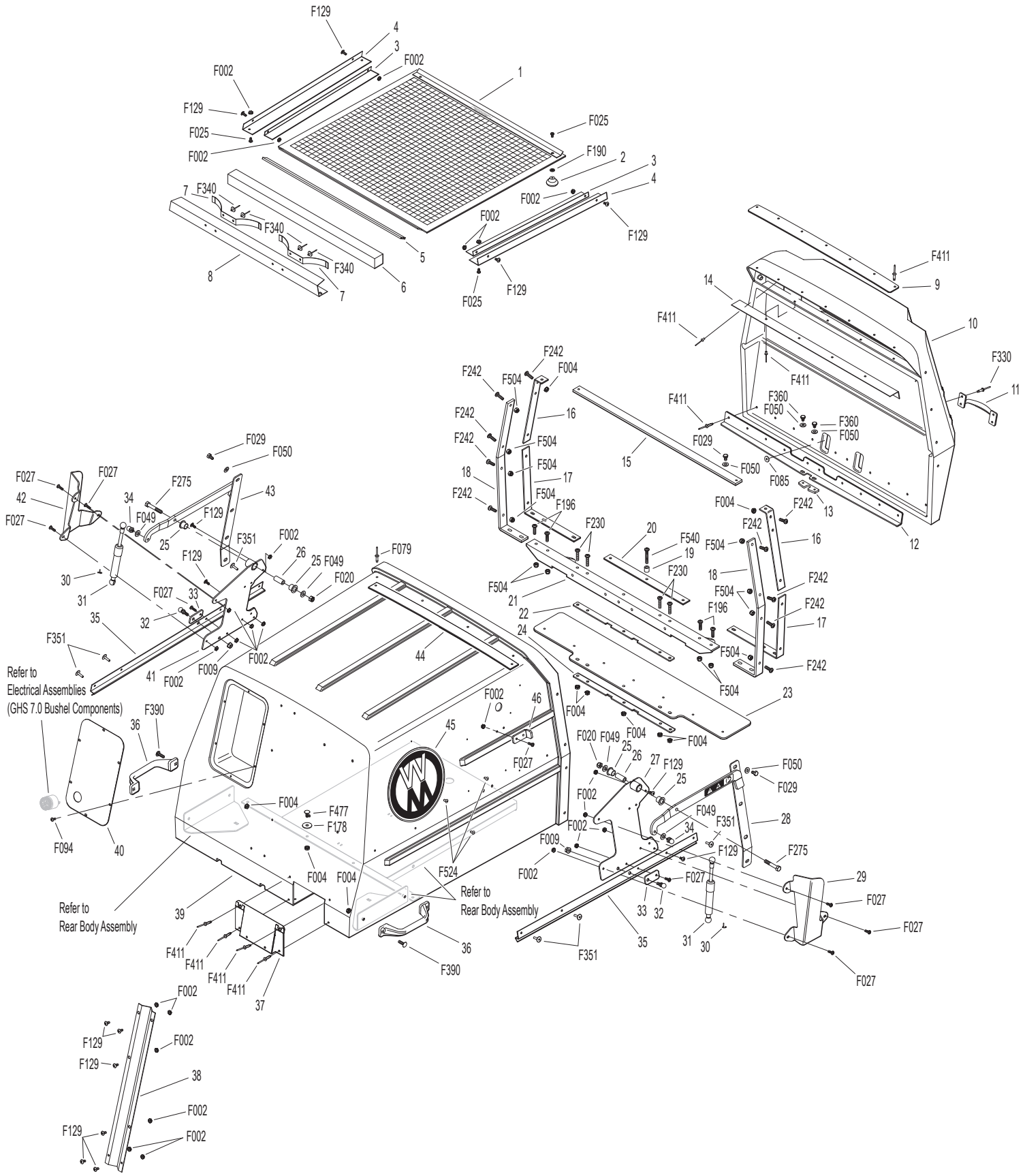

Beginning S/N 147007
Use only genuine **Walker**® replacement parts.

ELECTRICAL ASSEMBLY

ITEM NO.	PART NO.	DESCRIPTION	NO. REQ'D
Electrical Assembly			
1	5942-11	Delta Hex Nut	1
2	5942-9	Safety Switch (NO), Delta Threaded	1
3	7834-3	Wire Saddle (3 Wires)	4
4	5832	Cable Clamp (1/2)	1
5	5975-1	Cable Tie (18# x 3-3/4")	3
6	NS	Rectifier	1
7	6941-3	10 Amp Fuse	1
8	NS	Fuse Holder (Kohler)	1
9	6929-4	Circuit Breaker / Fuse Holder	1
10	8941	Circuit Breaker (30 Amp) Auto Reset / Sealed	1
11	4940-11	Jumper Wire	1
12	5942-10	Safety Switch (NC), Delta Side Mount	1
13	5942-8	Safety Switch (NO), Delta Side Mount	1
14	4024-13	Safety Switch Plate	1
15	6942	Relay Switch 20/40 Amp (NC)	3
16	5943-7	Wire Harness Assembly	1
17	7833	Cable Clamp (7/8 x 1/4)	2
18	8990-1	Hourmeter (Global)	1
19	8960-15	Ignition Switch (With Keys) (Includes Items # 20, 21 & F349)	1
20	7854	Plastic Tip / Red	1
21	8960-3	Key Set W/Umbrella	1
22	8996-9	Red Indicator Light Assembly	1
23	8536	Warning Horn	1
24	7941-3	Boot, Circuit Breaker	1
25	7941-8	Circuit Breaker (5 Amp)	1

ITEM NO.	PART NO.	DESCRIPTION	NO. REQ'D
Battery Assembly			
26	2940-2	Battery Cable (22")	1
27	5932	Battery Terminal Insul., Black (-)	1
28	5933	Battery Terminal Insul., Red (+)	1
29	NS	Battery (12V/300.CA/Wet)	1
30	6390-5	Battery Guard	1
31	5839	Hook Bolt	2
32	4940-6	Battery Cable (33")	1
Fasteners			
	F002	10-24 Keps Nut	7
	F004	1/4-20 Keps Nut	7
	F019	1/4-20 ESNA Wing Nut	2
	F025	10-24 x 3/8 PPHMS	4
	F026	10-24 x 1/2 PPHMS	3
	F029	1/4-20 x 1/2 Hex Bolt	3
	F031	1/4-20 x 5/8 Hex Bolt	2
	F032	1/4-20 x 3/4 Hex Bolt	2
	F050	1/4 SAE Washer	2
	F052	5/16 Ext. Star Lock Washer	2
	F112	5/8 x 1-1/4 x .03 Washer	3
	F146	1/4-20 Jam Nut	1
	F182	1/4 x 5/8 x 1/8 Washer	2
	F211	1/4-20 x 7/8 Hex Bolt	1
	F232	10-32 Keps Nut	2
	F349	Washer .835 ID 1.122 OD, SS	1
	F497	M8 x 20 Hex Bolt	2
	F505	6-32 x 7/8 Hex Trim MS, SS	4
	F506	6-32 Nylock Nut	4

NOTE: Refer to **ELECTRICAL CONNECTORS,** Page 26, for identification of all Electrical Wiring Service Parts.

NOTE: Decals for this assembly are not shown here. Refer to **TRACTOR DECALS,** Page 2, for Decal listing and placement information.

ELECTRICAL ASSEMBLY

Refer to Body / Chassis Assembly

Refer to Body / Chassis Assembly

Refer to Body / Chassis Assembly

Refer to Main Component Power Transmission

Refer to Engine Group

Refer to Steering Control Assemblies

Refer to Body / Chassis Assembly

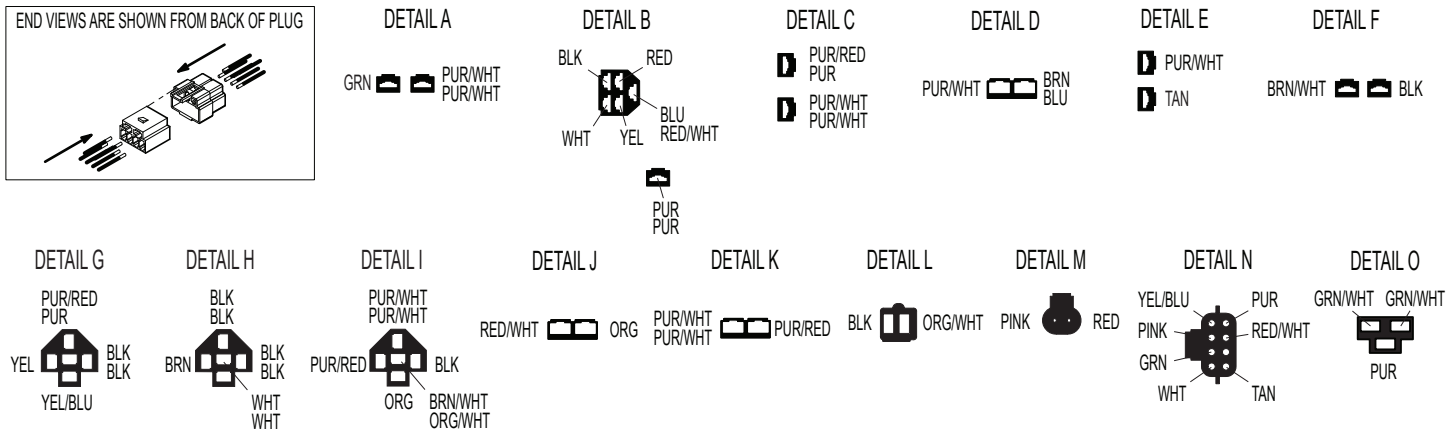

Beginning S/N 147007

Use only genuine **Walker**® replacement parts.

ELECTRICAL ASSEMBLIES (GHS 7.0 BUSHEL COMPONENTS)

ITEM NO.	PART NO.	DESCRIPTION	NO. REQ'D
Horn & Harness Channel Assemblies			
1	5536-2	Horn, Full Signal	*
2	5976-2	Grommet (3/16 x 3/4)	2
3	5975-1	Cable Tie (18# x 3-3/4")	1
Harness & Grass-Pak® Switch Assemblies			
4	8950-4	Powerfil Wire Harness (7.0/10.0)	1
5	5833	Cable Clamp (1/4)	2
6	5594-6	Aluminum Shaft & Vane Assembly	1
7	5592-20	Grass-Pak® Switch Assembly	1

ITEM NO.	PART NO.	DESCRIPTION	NO. REQ'D
Fasteners			
	F002	10-24 Keps Nut	4
	F025	10-24 x 3/8 PPHMS	1
	F037	10-24 x 5/8 PTH Screw	1
	F129	10-24 x 1/2 PTHMS	2
	F508	4-40 Keps Nut, SS	2
	F509	4-40 x 1/2 Hex Head, SS	2

* Service Part Only

NOTE: Refer to **ELECTRICAL CONNECTORS,** Page 26 for identification of all Electrical Wiring Service Parts.

ELECTRICAL ASSEMBLIES (GHS 7.0 BUSHEL COMPONENTS)

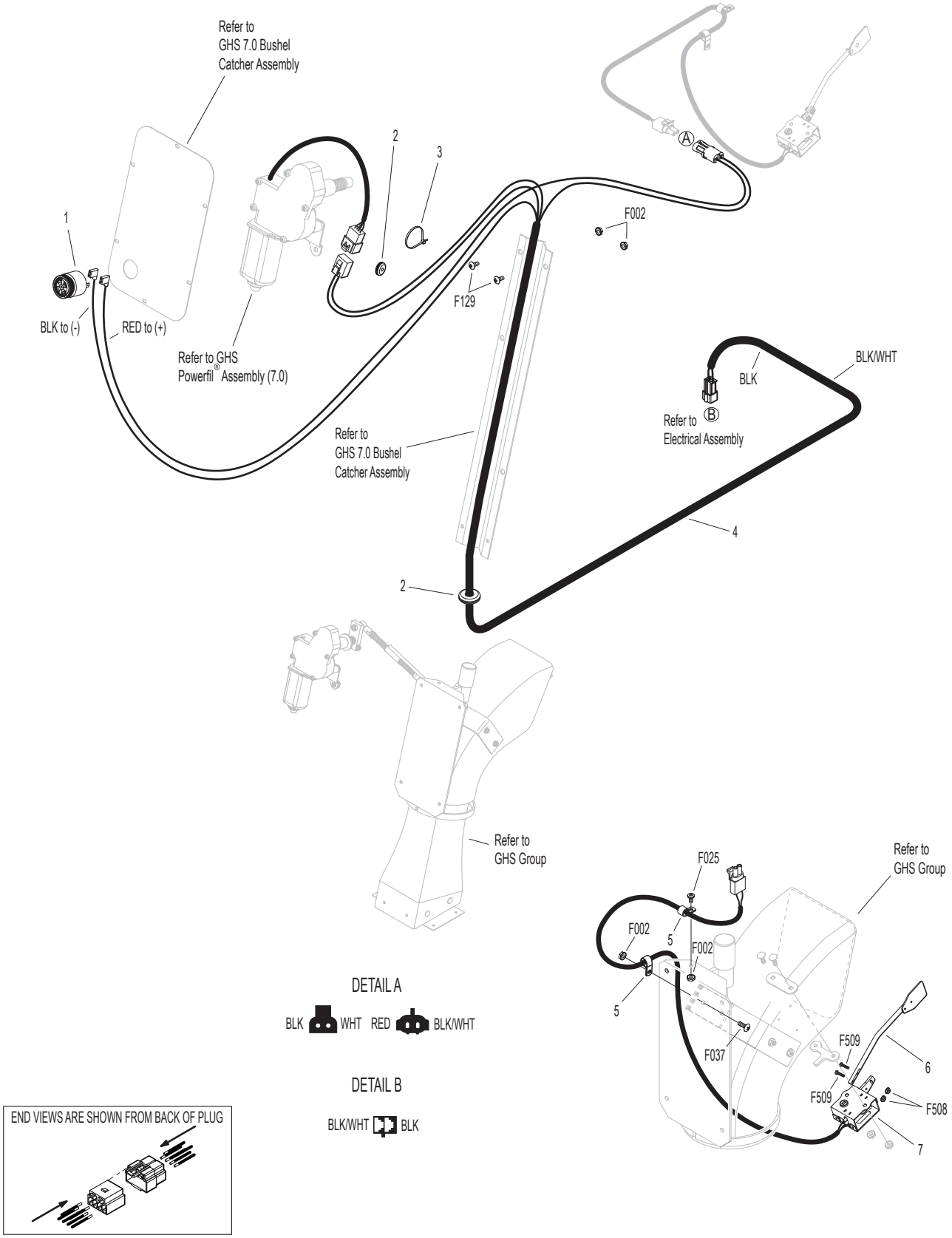

Beginning S/N 147007
Use only genuine **Walker**® replacement parts.

ELECTRICAL CONNECTORS

ITEM NO.	PART NO.	DESCRIPTION	NO. REQ'D
Electrical Wiring Service Parts			
1	5996-1	16-14 GA Butt Connector	*
2	5996-11	12-10 GA Butt Connector	*
3	7942-14	16-14 GA Shrink Connector	*
4	7942-13	12-10 GA Shrink Connector	*
5	5995-1	Wire Terminal Adapter	*
6	5996-4	16-14 GA Bullet Conn., Male	*
7	5996-5	16-14 GA Bullet Conn., Female	*
8	5940-4	16-14 GA Spg. Loaded Term., Female	*
9	5940-7	Wire Clip, Female	*
10	5996	1/4 x 16-14 GA QDF Terminal	*
11	5996-2	3/16 x 22-18 GA QKS Term., Female	*
12	7996	16-14 GA QKS Term., Female	*
13	5940-5	16-14 GA Spg. Loaded Term., Male	*
14	5996-0	1/4 x 22-18 GA QKS Term., Male	*
15	5996-18	16-14 GA Ring Term. (#8) Nylon Insulated	*
16	7996-1	1/4 x 16-14 GA QKS Term., Male	*
17	5996-8	6 GA Ring Lug (5/16) Insulated	*
18	5996-9	22-18 GA Ring Term. (#10)	*
19	5996-10	16-14 GA Ring Term. (5/16) Insulated	*
20	5996-12	12-10 GA Ring Term. (5/16)	*
21	5996-13	16-14 GA Ring Term. (# 10) Insulated	*
22	5996-15	12-10 GA Ring Term. (1/2)	*
23	5996-16	6 GA Ring Terminal (1/4)	*
24	5996-17	16-14 GA Ring Term. (1/4)	*
25	5996-20	12-10 GA Ring Term. (1/4) Insulated	*
26	5996-21	12-10 GA Ring Term. (#10) Insulated	*
27	7942-4	Single Connector, Male	*
28	8942	2-Way Connector, Male	*
29	7942-1	2-Way Locking Connector, Female	*
30	7942-2	2-Way Connector, Male	*
31	7942-3	2-Way Connector, Female	*
32	7942-10	2-Way Locking Connector, Male	*
33	5940-8	3-Way Connector, Male	*
34	7942-9	3-Way Connector, Male	*
35	8944	3-Way Locking Connector, Male	*
36	8944-1	3-Way Locking Connector, Female	*
37	7942-11	4-Way Connector, Male	*
38	7942-12	4-Way Connector, Female	*
39	7942-5	5-Way Connector, Male	*
40	5940-2	5-Way Connector, Male	*
41	8942-1	5-Way Connector, Female	*
42	7942-6	6-Way Connector, Male	*
43	7942-7	6-Way Connector, Male	*
44	7942-8	8-Way Connector, Male	*
45	8942-2	8-Way Connector, Female	*
46	8942-3	5-Way Connector, Male	*
47	5940-9	3-Way Connector (M)	*
48	7942-15	6-Way Connector (Female)	*
49	7940-3	Packard Plug (Male)	*
50	7940-4	Packard Plug (Female)	*

* Service Part Only

NOTE: Not all Electrical Connectors are used with all assemblies.

NOTE: Refer to **ELECTRICAL ASSEMBLY,** Page 22, for locations of Wiring Harness, Electrical Components and of all Electrical Wiring Service Parts.

ELECTRICAL CONNECTORS

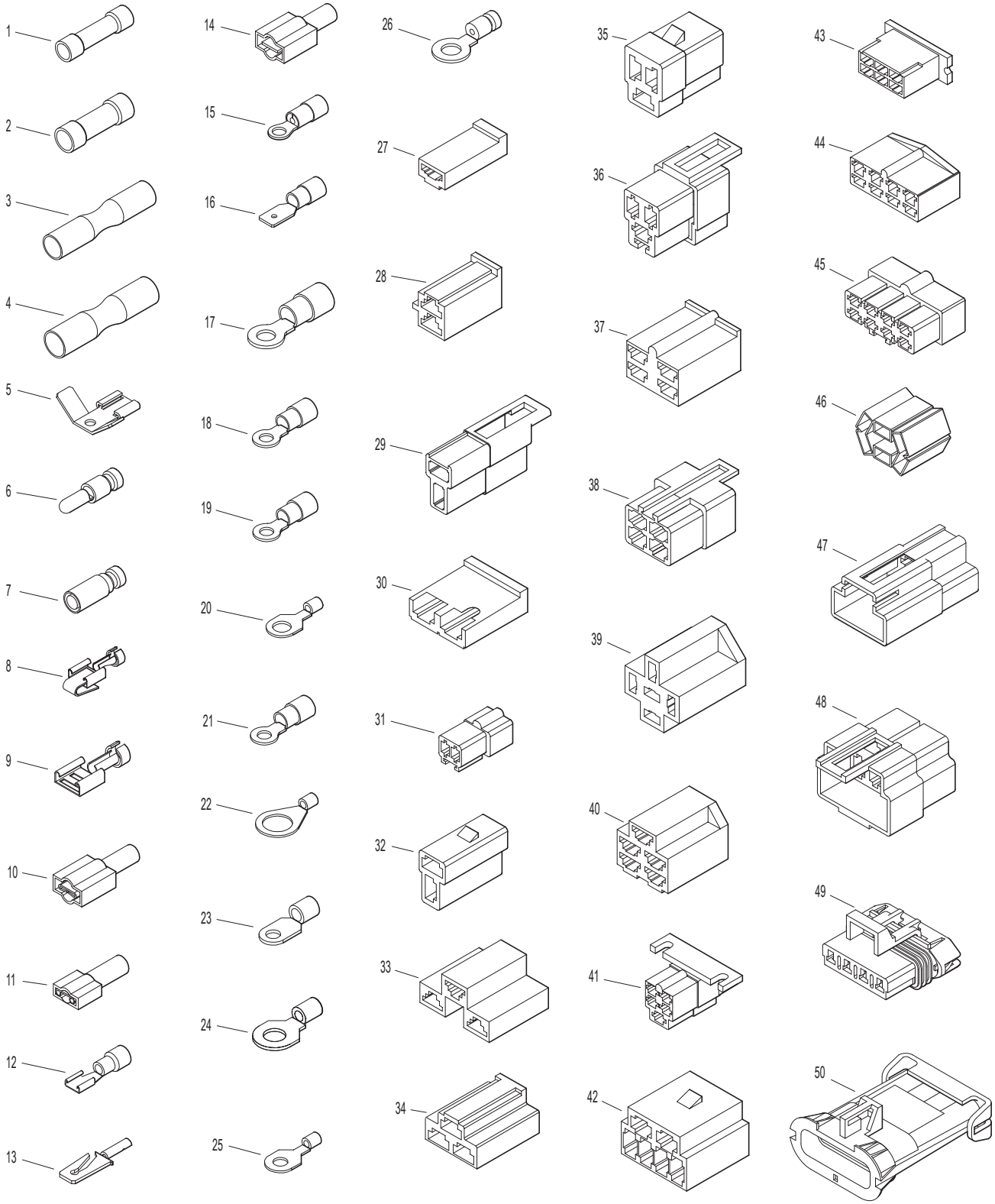

LUBRICATION POINTS

ITEM NO.	LOCATION	LUBRICATION TYPE	NO. PLACES
Lubrication Points			
1	Steering Lever Pivot	Grease	2
2	FSC Lever Pivot	Grease	1
3	Deck-to-PTO Coupling (Grease Spline Slide Area)	Grease	1
4	Universal Joint Tube Assembly	Grease*	1
5	Deck Support Arm Pivot	Grease	2
6	Hydro Idler Pivot	Grease	1
7	PTO Clutch Lever Pivot	Grease	1
8	Body Latch Pivot	Oil	1
9	Transaxle Oil Reservoir	Oil/20W-50	1
10	Clutch Actuator Push Rod (Grease Slide Area)	Grease	1
11	PTO Belt Tightener Pivot	Grease	1
12	Brake Band Pivot Pins (Clevis)	Oil	2
13	Catcher Hinge Point	Oil	2
14	Throttle Control Cable Ends	Oil	2
15	Engine Dipstick / Oil Filler	Oil**	1
16	Engine Idler Pivot	Grease	1
17	Parking Brake Lever	Grease	1
18	Throttle Control Pivot	Oil	1

* Grease every 25 hours.

** Refer to S14i **Operator's Manual** for procedure for checking and changing oil in Engine Crankcase.

NOTE: See Model S14i **Operator's Manual** (P/N 5000-37) for proper lubrication intervals.

LUBRICATION POINTS

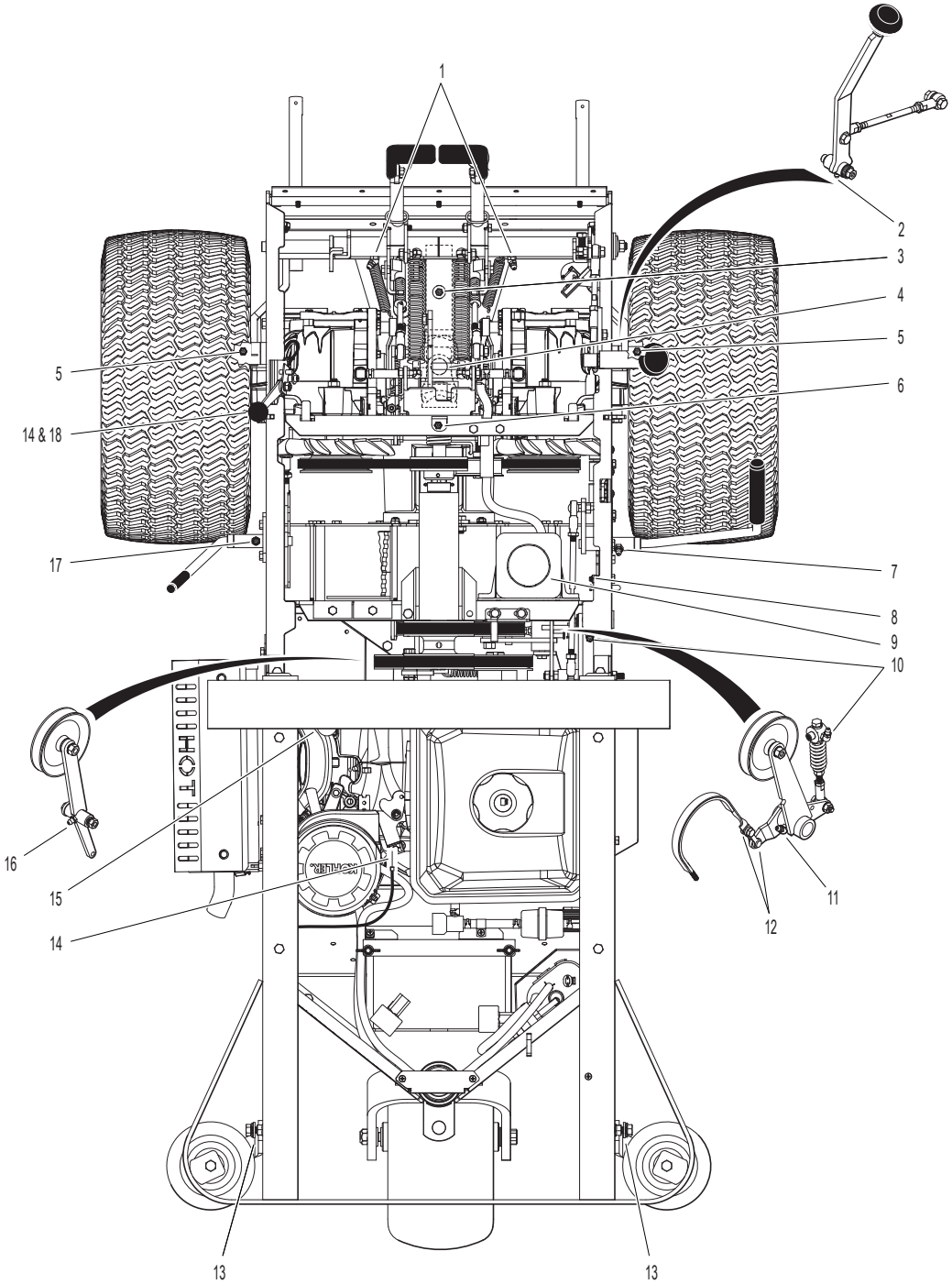

WIRING SCHEMATIC

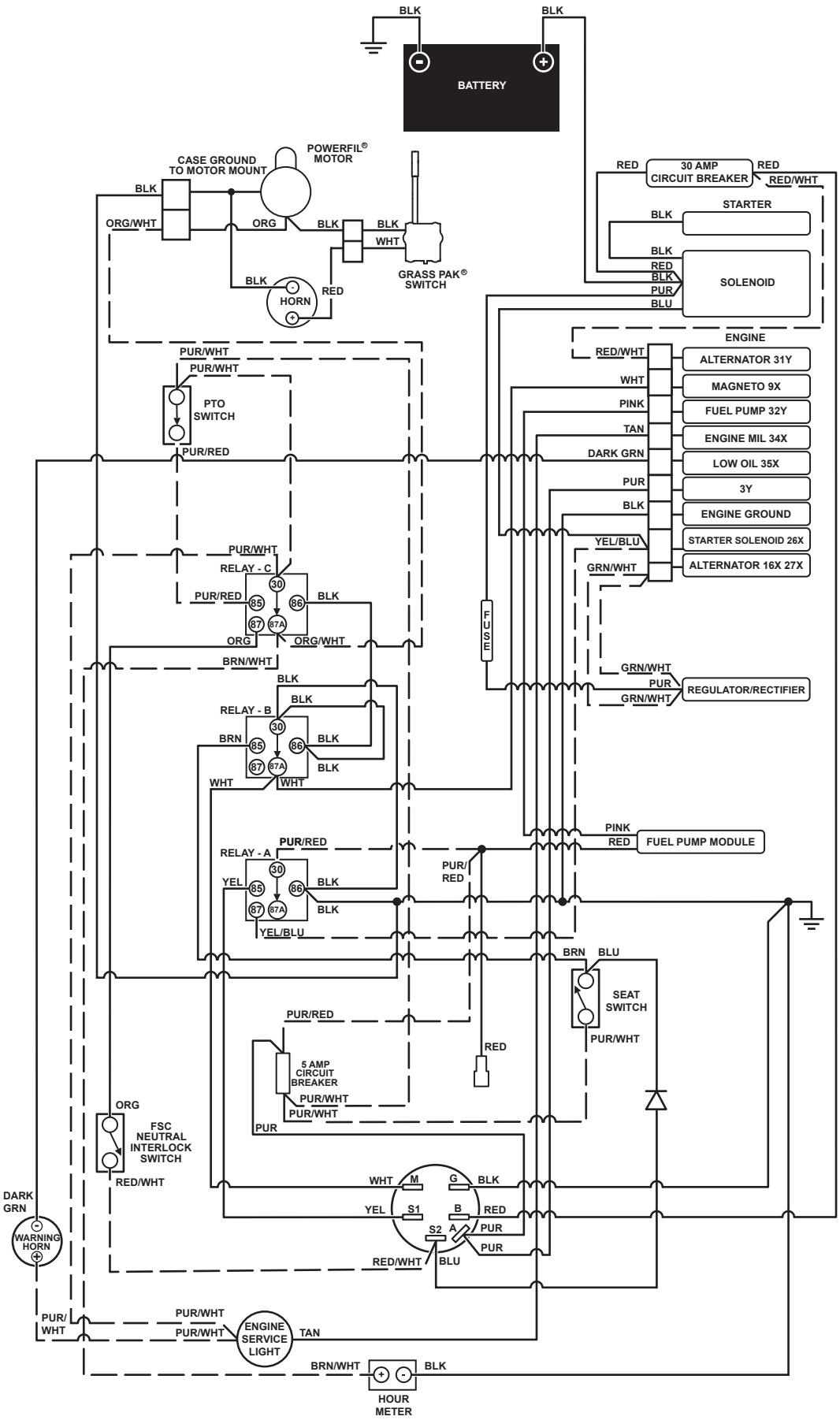

WALKER MODEL S14i
Beginning S/N 2017-147007

IGNITION SWITCH CIRCUITS	
OFF	G + M
START	B + A / S1 + S2
RUN	B + A

S1 = START CIRCUIT
S2 = START/ACCESSORY CIRCUIT
M = MAGNETO GROUND CIRCUIT
B = BATTERY CIRCUIT
A = ACCESSORY CIRCUIT
G = GROUND CIRCUIT

RELAY - A	
START RELAY	
OFF	30 + 87A
START	30 + 87
RUN	30 + 87
PTO ON	30 + 87A

RELAY - B	
IGNITION RELAY	
OFF	30 + 87A
START	30 + 87
RUN	30 + 87
PTO ON	30 + 87A

RELAY - C	
PTO INTERLOCK RELAY	
OFF	30 + 87A
START	30 + 87
RUN	30 + 87
PTO ON	30 + 87

MAINTENANCE AND SERVICE RECORD SHEET

DATE	SERVICE ITEM	ENGINE HOURS

MAINTENANCE AND SERVICE RECORD SHEET

DATE	SERVICE ITEM	ENGINE HOURS

LIMITED WARRANTY
FOR
WALKER MODEL S14i
RIDER MOWER

1. WHAT THIS WARRANTY COVERS, AND FOR HOW LONG:

Walker Manufacturing company will, at its option, repair or replace, without charge, any part covered by this warranty which is found to be defective in material and/or workmanship within one (1) year* after date of sale to the original retail purchaser unless the product is used for rental purposes, in which case this warranty is limited to ninety (90) days. At Walker's request, customer will make the defective part available for inspection by Walker and/or return the defective part to Walker, transportation charges prepaid. All parts and components of the Walker Mower are covered by this warranty **except** the following components which are warranted separately by their respective manufacturers:

Kohler Engine
Battery

The available warranties covering these items are furnished with each mower. Walker does not assume any warranty obligation, liability or modification for these items, which are covered exclusively by the stated warranty of the respective manufacturers noted above.

* A two (2) year or 2000 hour (whichever comes first) warranty is offered for Hydro-Gear ZT3100 hydrostatic transmissions; covers full cost of replacement up to 1000 hours of use, and after 1000 hours warranty coverage is prorated against 2000 hours.

2. WHAT THIS WARRANTY DOES NOT COVER:

A. This warranty does not cover defects caused by depreciation or damage caused by normal wear, accidents, improper maintenance, improper use or abuse of the product, alterations, or failure to follow the instructions contained in the Operator's Manual for operation and maintenance.

B. The customer shall pay any charges for making service calls and/or for transporting the mower to and from the place where the inspection and/or warranty work is performed.

3. HOW TO OBTAIN SERVICE UNDER THIS WARRANTY:

Warranty service can be arranged by contacting the dealer where you purchased the mower or by contacting Walker Manufacturing Company, 5925 East Harmony Road, Ft. Collins, CO 80528. Proof of the date of purchase may be required to verify warranty coverage.

4. WARRANTY LIMITATION:

A. **THERE IS NO OTHER EXPRESS WARRANTY. ANY WARRANTY THAT MAY BE IMPLIED FROM THIS PURCHASE INCLUDING MERCHANTABILITY AND FITNESS FOR A PARTICULAR PURPOSE IS HEREBY LIMITED TO THE DURATION OF THIS WARRANTY AND TO THE EXTENT PERMITTED BY LAW ANY AND ALL IMPLIED WARRANTIES ARE EXCLUDED.** Some states do not allow limitations on how long an implied warranty lasts, so the above limitations may not apply to you.

B. **WALKER WILL NOT BE LIABLE FOR ANY INCIDENTAL, CONSEQUENTIAL, OR SPECIAL DAMAGES AND/OR EXPENSES IN CONNECTION WITH THE PURCHASE OR USE OF THE MOWER.** Some states do not allow the exclusion or limitation of incidental or consequential damages, so the above limitation(s) or exclusion(s) may not apply to you.

C. Only the warranty expressed in this limited warranty shall apply and no dealer, distributor, or individual is authorized to amend, modify, or extend this warranty in any way. Accordingly, additional statements such as dealer advertising or presentations, whether oral or written, do not constitute warranties by Walker, and should not be relied upon.

D. This warranty gives you specific legal rights, and you may also have other rights which vary from state to state.

WALKER

WALKER MFG. CO. • 5925 E. HARMONY ROAD, FORT COLLINS, CO 80528 • (970) 221-5614
FORM NO. 120617 PRINTED IN USA www.walkermowers.com
©2017 WALKER MFG. CO