HEADROOM REQUIRED

OPENING HEIGHT	VERTICAL HEADROOM	HORIZONTAL HEADROOM
THRU 7'-4"	15 ½"	17"
OVER 7'-4" THRU 8'-8"	16"	17 ½"
OVER 8'-8" THRU 10'-0"	17"	18 ½"
OVER 10'-0" THRU 12'-0"	18"	19"

NOTES:

1. OPERATION TYPE MAY BE PUSH-UP OR RIGHT HAND INTERNAL ELECTRIC.
2. FOR CRITICAL FITS DUE TO REDUCED AVAILABLE HEADROOM OR SIDEROOM CLEARANCES, CONSULT FACTORY.
3. CLEARANCES SHOWN ARE MAXIMUMS. LESSER CLEARANCES MAY BE POSSIBLE.
4. UNLESS OTHERWISE NOTED, LOCKING SHALL BE BY SINGLE MINI SLIDE LATCH BOLTED TO CURTAIN AND SUITABLE FOR DOUBLE PADLOCKS AND SINGLE CYLINDER LOCK BY OTHERS.
5. LATCH COVER IS YELLOW ZINC (STAINLESS STEEL OPTIONAL) AND SLIDE IS MAGNETIC STAINLESS.
6. CURTAIN FINISH SHALL BE SILICONE POLYESTER PRE-PAINT OVER GALVANIZED GRADE 80 STEEL.
7. GUIDES, BRACKETS, BOTTOM BAR ANGLE AND HEAD STOPS ARE ZINC COATED.
8. MAXIMUM OPENING SIZE: 10'-0" X 12'-0".
9. STEEL WINDLOCKS WILL BE PROVIDED ON DOOR ASSEMBLIES FOR OPENINGS GREATER THAN 6'-0" TO 10'-0" WIDE.
10. JANUS MODEL 750 IS A STATE OF FLORIDA APPROVED WINDLOAD PRODUCT. PRODUCT EVALUATIONS AND STAMPED DRAWINGS ARE ACCESSIBLE VIA. www.floridabuilding.org. FL#12765.7 & 12765.8
11. JANUS MODEL 750 IS EVALUATED FOR COMPLIANCE THROUGH TEXAS DEPARTMENT OF INSURANCE (TDI). PRODUCT EVALUATIONS AND STAMPED DRAWINGS ARE ACCESSIBLE VIA. www.tdi.texas.gov. TDI# GDR-39.

MINI LATCH

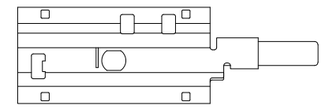

OUTSIDE OF DOOR VIEW

MINI LATCH CYLINDER LOCK BACK PLATE
(ONLY USED WITH CYLINDER LOCK)

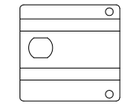

INSIDE OF DOOR VIEW

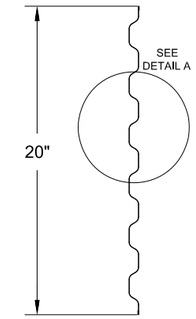

26 GA CURTAIN PANEL DETAIL

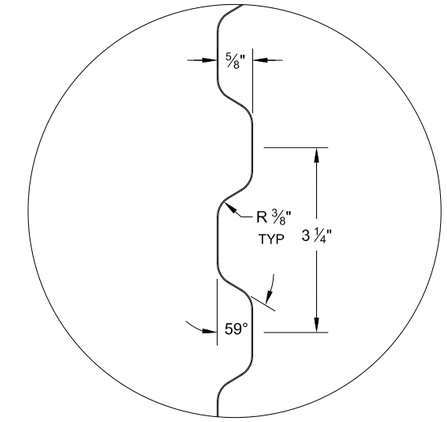

DETAIL A

MINI STOP CLIP

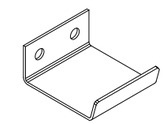

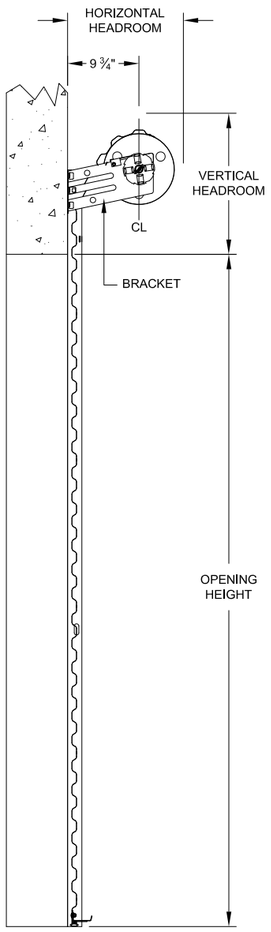

END VIEW

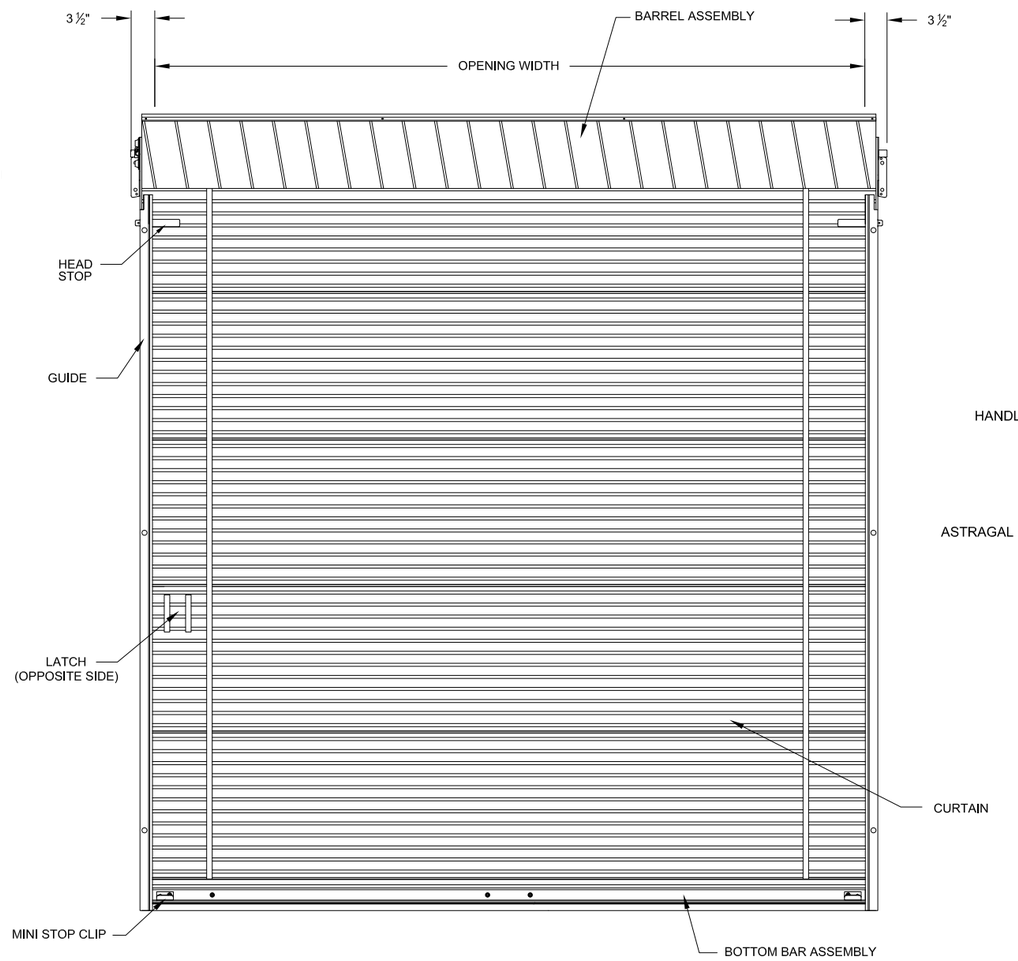

INSIDE ELEVATION

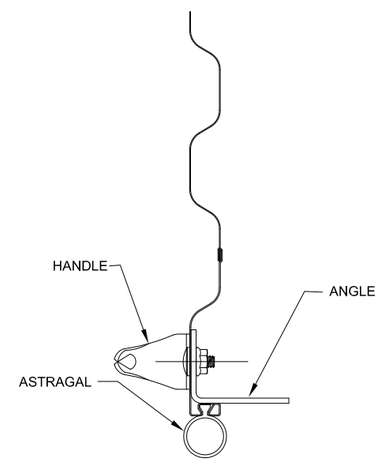

BOTTOM BAR ASSEMBLY

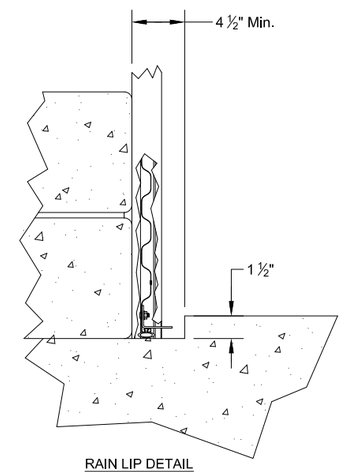

RAIN LIP DETAIL

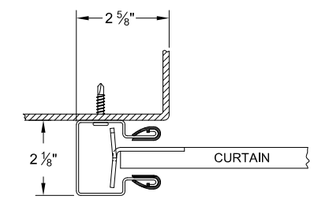

STEEL JAMBS USING #12-14 X 1" TEKS PANCAKE HEAD

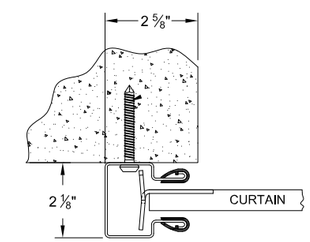

CONCRETE/FILLED BLOCK JAMBS USING 5/16" X 2 1/4" TAPCON XL

16 GA. GUIDE MOUNTED DETAIL

D.V. 08/13/2013

MINI DOOR SERIES: 750

CUSTOMER NUMBER:	DATE:
CUSTOMER NAME:	CONTACT:
PROJECT NAME:	
PROJECT LOCATION:	
PLANT:	SALESPERSON:
DRAWN BY:	DATE:
DRAWING NUMBER:	SHT: OF:

JANUS INTERNATIONAL CORPORATION
134 JANUS INTERNATIONAL BLVD.
TEMPLE, GA 30179-4435
770-562-2850 FAX: 770-562-2264

FACTORY ORDER NUMBER	QTY	OPENING SIZE		JAMB TYPE			OUTSIDE CURTAIN COLOR	OPERATION			OPERATION HAND	WEATHERSTRIP			ADDED OPTIONS
		WIDTH	HEIGHT	STEEL	CONC./ MAS	WOOD		PUSH UP	REDUCED CHAIN	ELECTRIC		TOP	HEADER	SIDE	