TECHNIFLO®

275PS-F-3

Tech Data Sheet

Model	275PS-F-3 (L)	275PS-F-3 (M)	275PS-F-3 (H)
Impeller size (mm)	104.5	97	89.5
Liquid SG	1.2	1.5	1.9
Speed (rpm)	2900	2900	2900

Features

- Pumps come close coupled to standard 250W, 415 Volt motor.
- Non-Metallic wetted parts: ETFE Teflon casing with Viton front casing O-ring. (option: EPDM O-ring)
- Liquid Temperatures up to 90°C
- 25mm suction & 25mm discharge ports for hose tail or 1" suction & 1" discharge for BSP threaded

Performance Curves

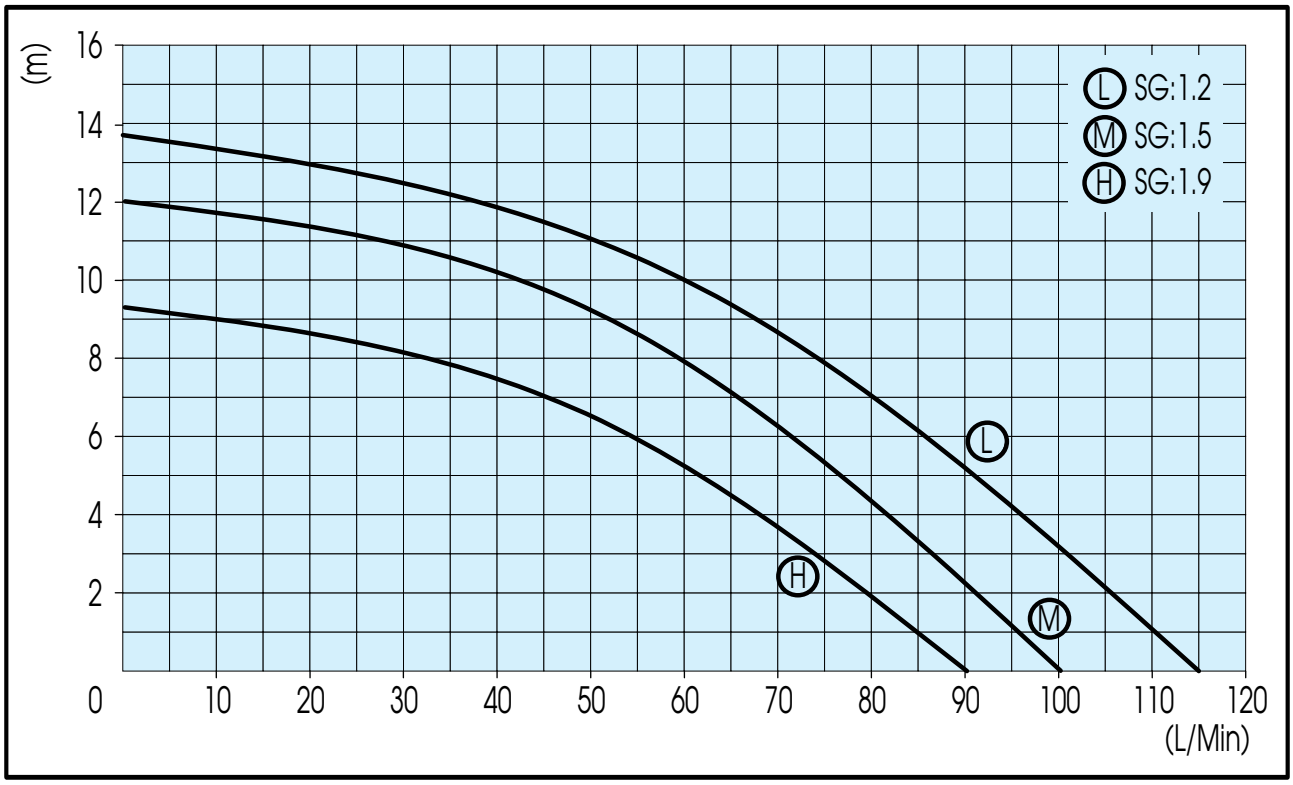

Dimensions

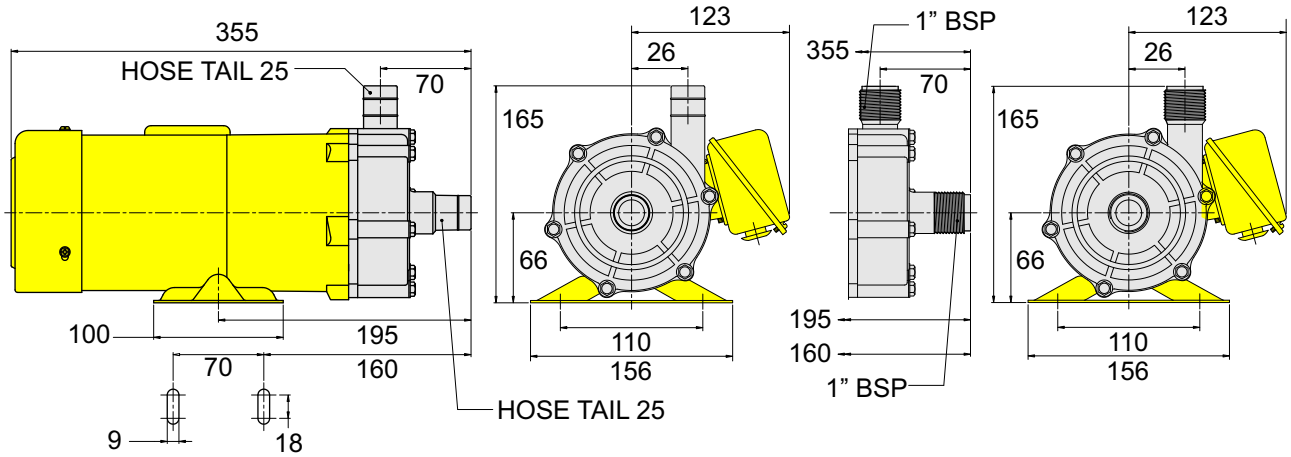

S41067