TECHNIFLO®

300PS-F

Tech Data Sheet

Model	300PS-F
Impeller size (mm)	119
Liquid SG	1.0
Speed (rpm)	2900

Features

- Pumps come close coupled to standard 330W, 230 Volt motor.
- Non-Metallic wetted parts: ETFE Teflon casing with Viton front casing O-ring. (option: EPDM O-ring)
- Liquid Temperatures up to 90°C
- 25mm suction & 20mm discharge ports for hose tail or 1" suction & 3/4" discharge for BSP threaded

Performance Curves

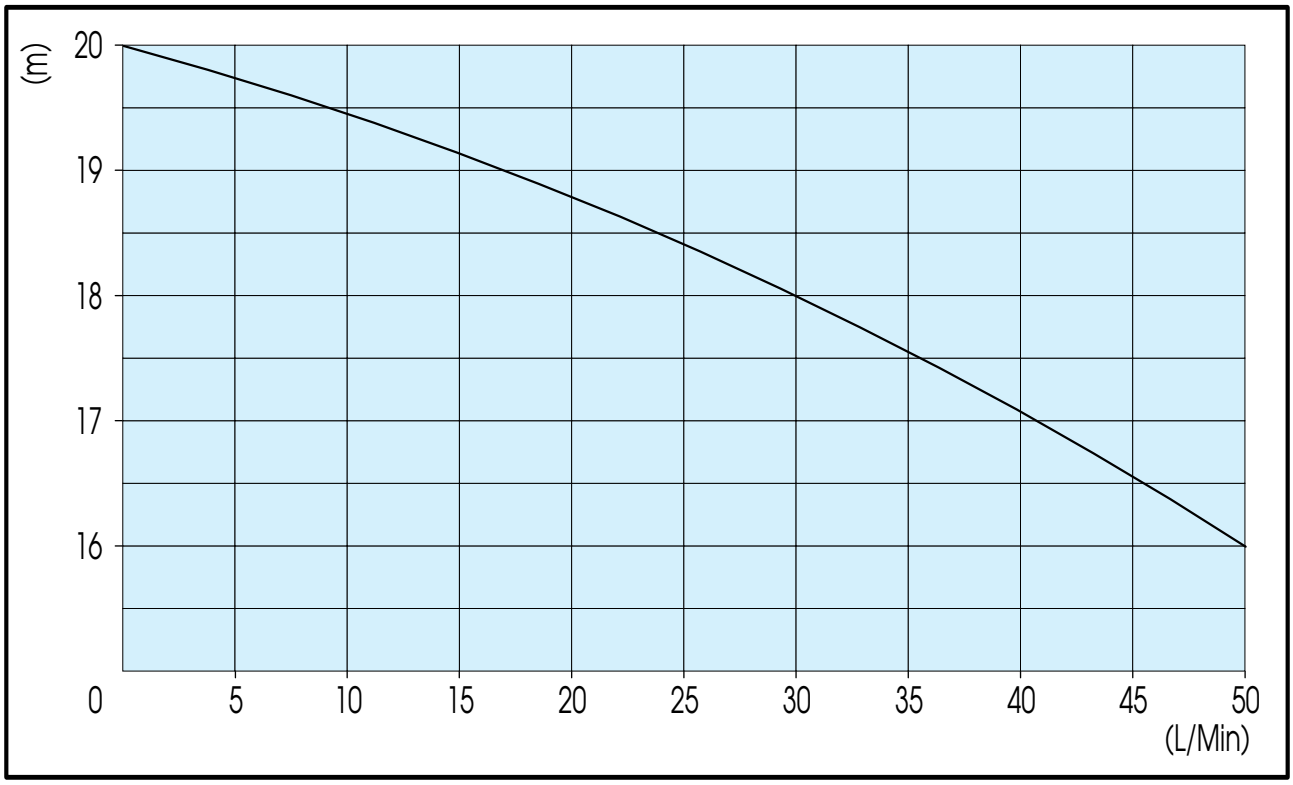
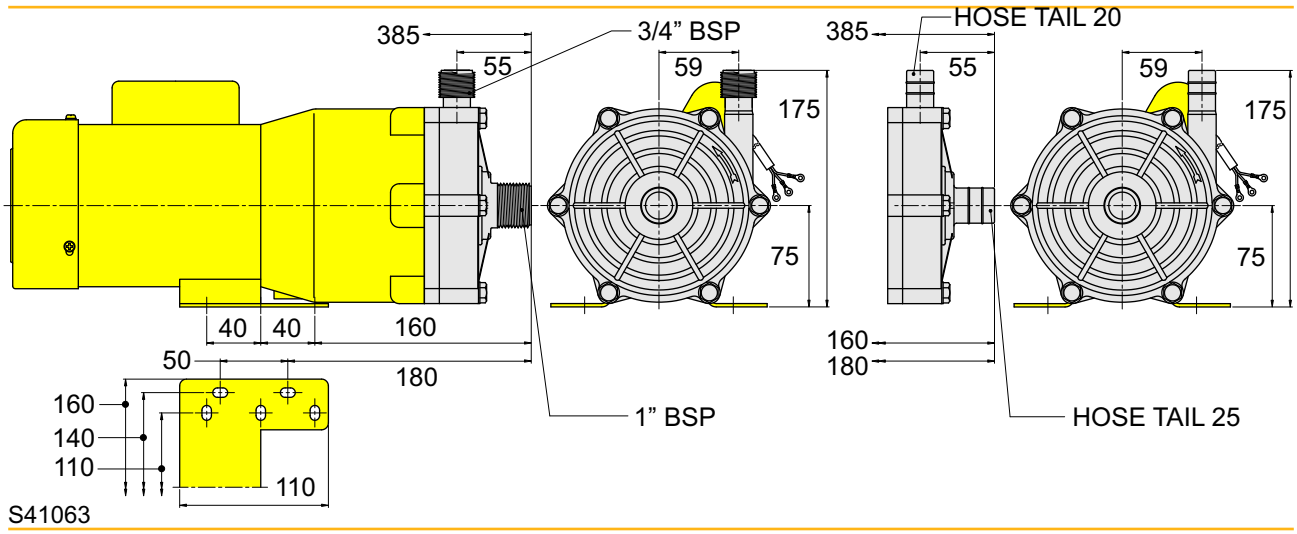
Dimensions