FUGLESANGS
Experts in flow optimization

GLOBAL OVERVIEW 2019

- PUMPS
- ENERGY OPTIMISATION
- SERVICES
- SEALING PRODUCTS

Fuglesangs Group
Since 1855 – 65 employees

FUGLESANGS

FSUBSEA

FUGLESANGS
Experts in flow optimization

WHO ARE WE?

FUGLESANGS
Experts in flow optimization

- Family owned company through five generations
- Supplier for the industry since 1916
- 34 employees
- Budget 2018: 105 MNOK (11M€)
- Solution-oriented with a focus on lower total costs
- Workshop and office in Caspar Storms road 21, Alnabru

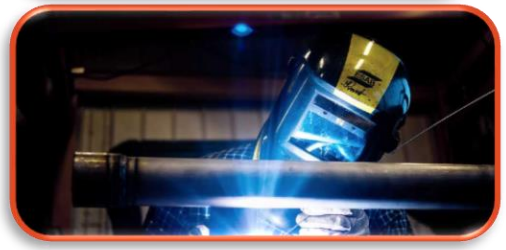

OFFICE & WORKSHOP OSLO

- 2000m² workshop
  - *9 meter ceiling height*
  - *25 tons crane capacity*
  - *Test pool*
  - *Hydraulic workshop*
  - *Painting hall / Soundblasting*
  - *Sealing workshop*

MARKETS

Energy & Environment

Fish & Aquaculture

General industry

Mines & Minerals

Marine

Oil & Gas

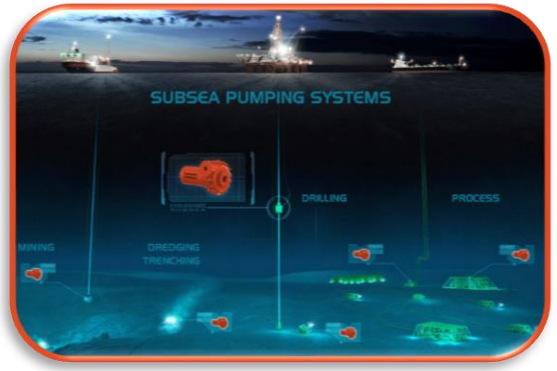

Subsea

Hydro power

SOLUTIONS

FUGLESANGS
Experts in flow optimization

Pumps

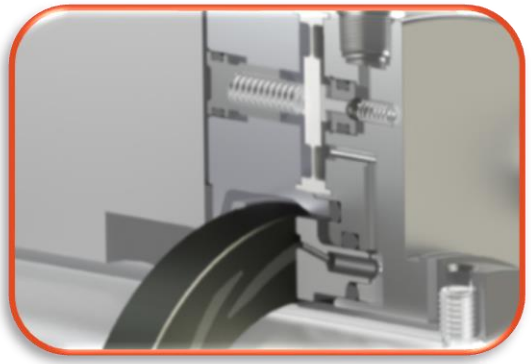

Sealing Products

Hydraulics

Composite

Industrial lubricants & chemicals

Compensators

Pipe Cold Repair

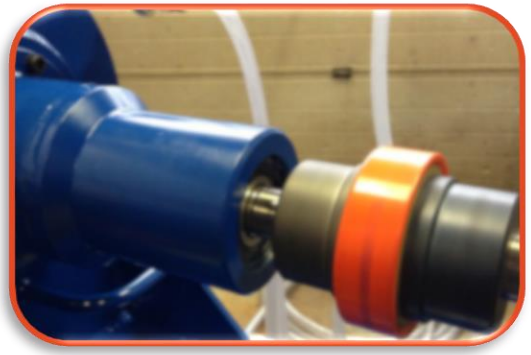

Power transmissions

CENTRIFUGAL PUMPS

FUGLESANGS
Experts in flow optimization

- Water-norm
- Heavy duty
- Screw centrifugal
- Chopper
- Slurry
- High pressure
- Sludge/lense
- Pump system with control

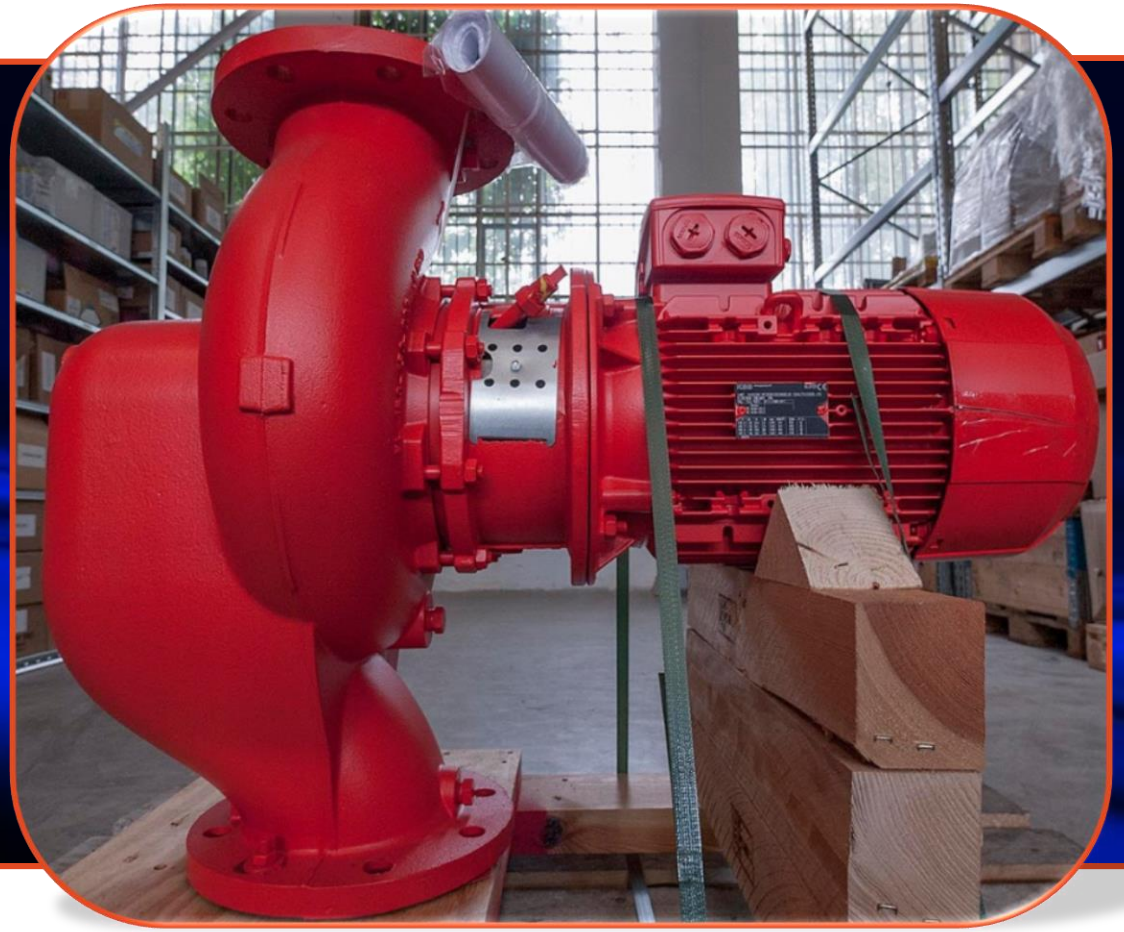

GARBARINO

FUGLESANGS
Experts in flow optimization

Water and chemistry standard pumps

GARBARINO

- Std horizontal
- Vertical inline
- Vertical «semi-dry»
- Thermal oil
- High pressure
- Side channel

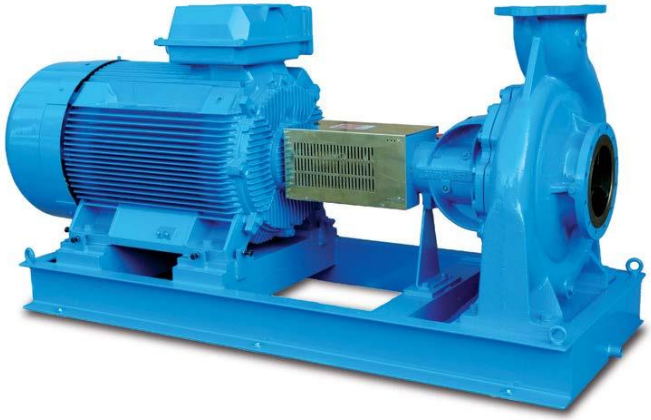

Typical applications and market:

Water, seawater, chemicals, cooling system,

Hot oil, pressure increase, emptying.

Process, marine, hydropower, fish, water & heat.

blackmer
PEOPLE PROVIDING FLOW TECHNOLOGY WORLDWIDE™

FUGLESANGS
Experts in flow optimization

System One process pumps

BLACKMER

- Std horizontal
- Vertical inline
- Std heavy duty design

Typical applications and market:

Hot water, slurry, chemicals, demanding applications.

Process, Marine, water & heat

CENTRIFUGAL PUMPS

Warman, heavy duty pumper

WEIR MINERALS

- «lines» pumps
- Ultra heavy duty

Typical applications and market:

Very demanding applications.

Process, Mines and Minerals.

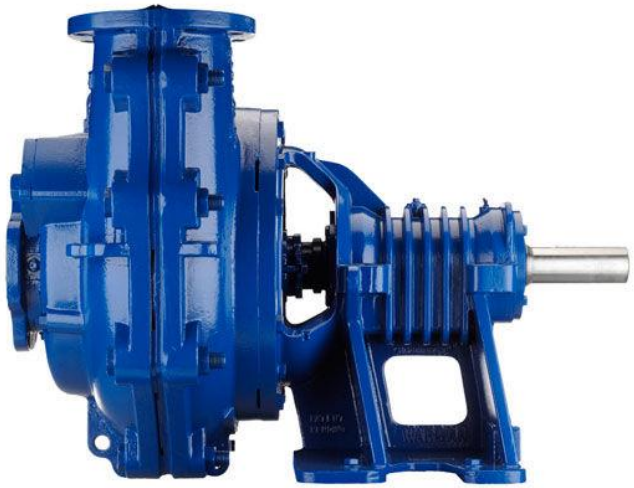

Linatex Hoses in stock

Leverandør	Artikkelnr.	Artikkel	På lager	I bestilling
WEIR MINERALS EUROPE LIMITED (GBP)	44008HAA7042MTMT	LINATEX® 100NB 801 SMOOTH CUT END HOSE - 20 METER	1	0
WEIR MINERALS EUROPE LIMITED (GBP)	44008HAA7043MTMT	LINATEX® 125NB 801 SMOOTH CUT END HOSE - 20 METER	2	0
WEIR MINERALS EUROPE LIMITED (GBP)	44008HAA7044MTMT	LINATEX® 150NB 801 SMOOTH CUT END HOSE - 20 METER	1	0
WEIR MINERALS EUROPE LIMITED (GBP)	CEH200VCWM	LINATEX® 200NB 801 CUT END HOSE VS40 - 10 METER	3	2
WEIR MINERALS EUROPE LIMITED (GBP)	44008HAA7009MTMT	LINATEX® 200NB SMOOTH C/E HOSE 10m COIL	0	0
WEIR MINERALS EUROPE LIMITED (GBP)	CEH250VCWM	LINATEX® 250NB 801 CUT END HOSE - VS40 - 10 METER	2	0
WEIR MINERALS EUROPE LIMITED (GBP)	44008HAA7092EAEA	LINATEX® 254NB 808 MINING HOSE	0	0
WEIR MINERALS EUROPE LIMITED (GBP)	CEH300VCWM	LINATEX® 300NB 801 CUT END HOSE - VS40	0	2
WEIR MINERALS EUROPE LIMITED (GBP)	CEH350VCWM	LINATEX® 801 SMOOTH CUT END HOSE - DN350 - 10 METER	1	0
WEIR MINERALS EUROPE LIMITED (GBP)	44008HAA7041MTMT	LINATEX® 80NB 801 SMOOTH CUT END HOSE - 20 METER	0	0
WEIR MINERALS EUROPE LIMITED (GBP)	44008HAA7040MTMT	LINATEX® HOSE 20M REEL DN50 - 20 METER	2	0
WEIR MINERALS EUROPE LIMITED (GBP)	44011HAA4006EAEA	LINATEX® HOSE GASKET - DN350 RF	2	0
WEIR MINERALS EUROPE LIMITED (GBP)	44011HAA4012EAEA	LINATEX® HOSE GASKET 100 MM NB RAISED FACE	0	0

CENTRIFUGAL PUMPS

DAB WATER•TECHNOLOGY

FUGLESANGS Experts in flow optimization

Water and sewage pumps

DAB

- Std horizontal
- Vertical in-line, simple and double
- Vertical high pressure
- Booster unit
- Dive pumps with and without «guide»
- Complete skid with control system
- «Cabin pumps» water supply

Typical applications and market:

Water, hot water, drainage, pressure Increase, circulation.

Process, hydropower, water, heat, drain, public sector.

CENTRIFUGAL PUMPS

RUHRPUMPEN

FUGLESANGS
Experts in flow optimization

Process pumps

RUHRPUMPEN

- Std horizontal
- Vertical in-line
- Split-case
- API
- Fire pumps

Typical applications and market:

Water, seawater, chemicals, petrochemical, transfer pumps.

Process, Hydropower, Water & heat, Oil & gas.

CENTRIFUGAL PUMPS

Unmatched Reliability Vaughan®

FUGLESANGS
Experts in flow optimization

Sludge, drainage pumps

VAUGHAN

- «chopper» pumps
- Screw centrifugal
- Mixing-unit

Typical applications and market:

Fish waste, biomass, drain, slurry,

Treatment plants, tank mixing.

Process, fish, purification plant.

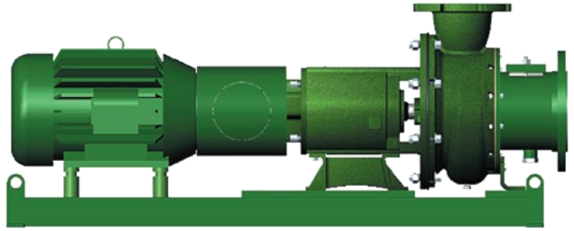

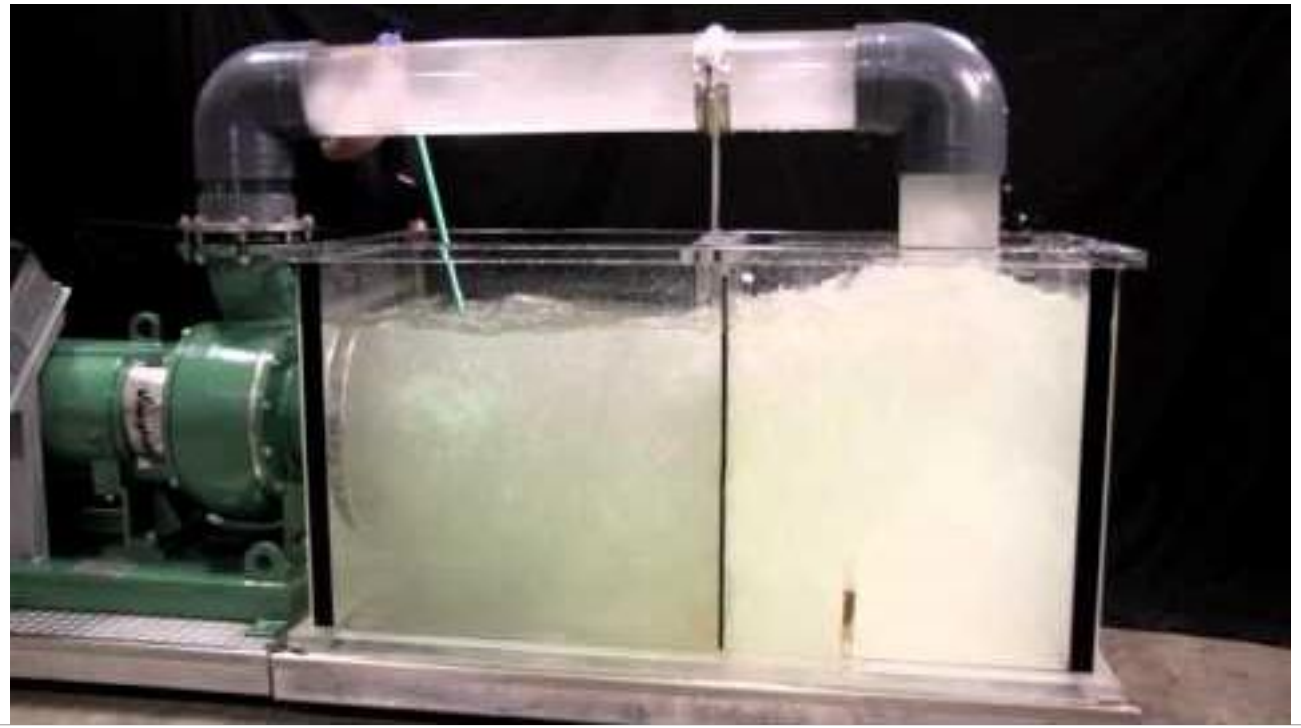

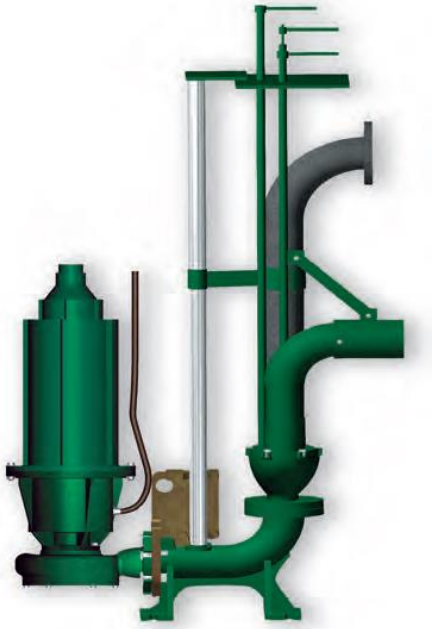

CENTRIFUGAL PUMPS

CSF INOX

FUGLESANGS
Experts in flow optimization

Food pumps

CSF INOX

- Centrifugal, self-priming
- Screw centrifugal
- Progessive cavity pumps
- Lobe
- Twin screw pumps
- Sinusoidal rotor pumps
- EHEDG / FDA / A3 / ATEX

CENTRIFUGAL PUMPS

Magnetic drive pumps

HMD and ANSIMAG

- Centrifugal
- «lining»
- API

Typical applications and market:

Chemicals, strong acids, clean media.

Process, labeling agent, pharmaceutical.

POSITIVE DISPLACEMENT PUMPS

- Air membrane
- Progressive cavity
- Screw
- Lobe
- Gear
- Diaphragm
- Hose
- Vane

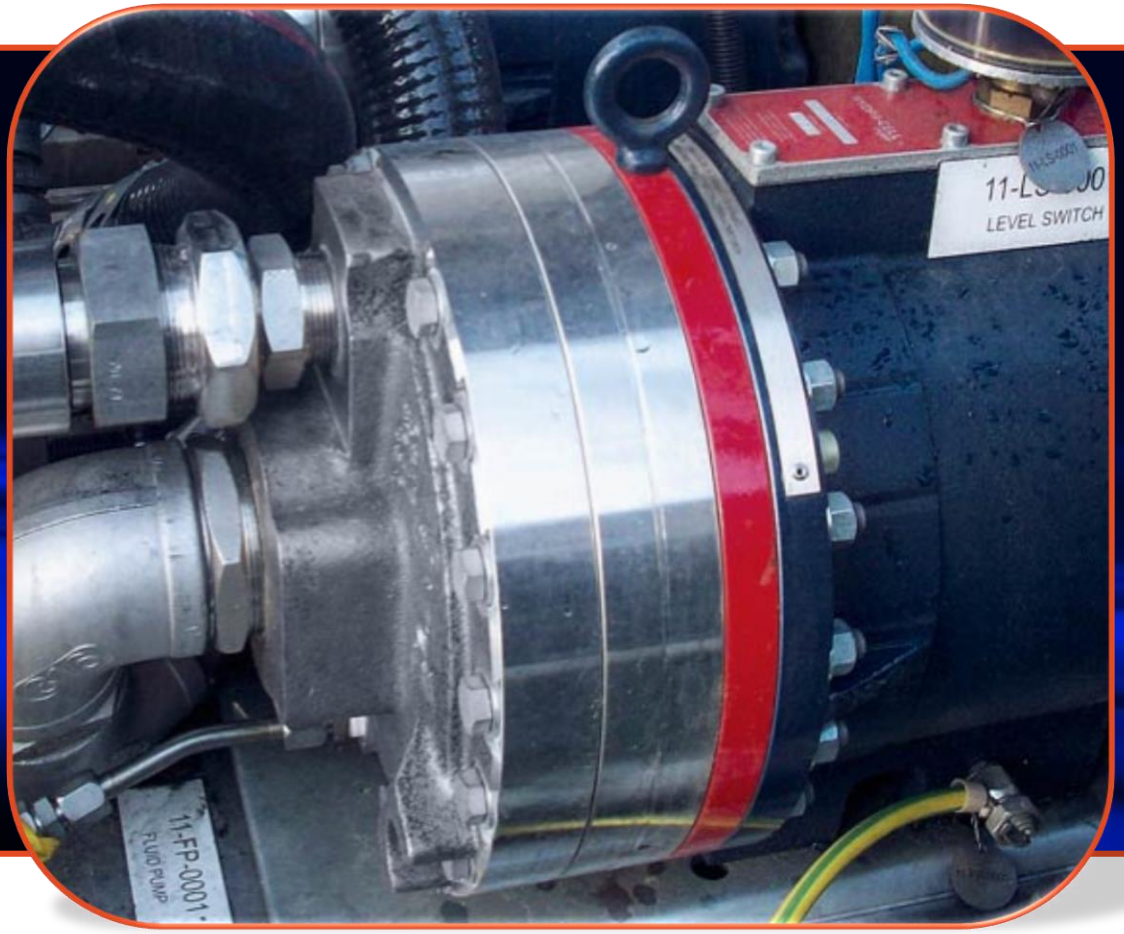

POSITIVE DISPLACEMENT PUMPS

NETZSCH
Proven Excellence.

FUGLESANGS
Experts in flow optimization

Sludge handling

NETZSCH

- Progessing cavity
- Lobe
- Macerator

Typical applications and market:

Sludge, polymers, biomass, dosage.

Process, branding agent, pharmaceutical,

Fish, treatment plant.

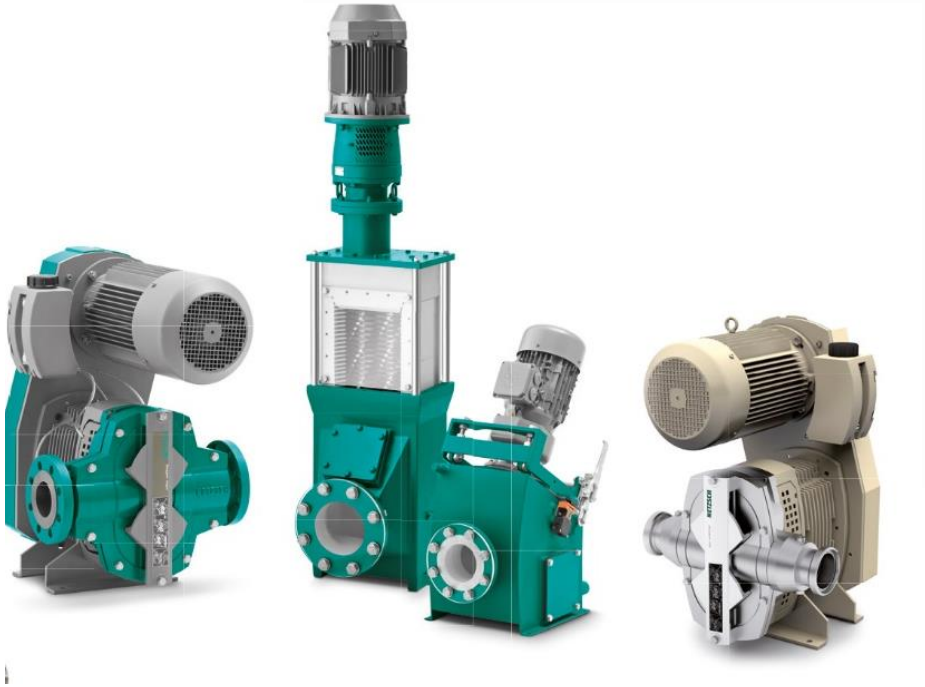

POSITIVE DISPLACEMENT PUMPS

WANNER Hydra-Cell® Seal-less Pump Technology

FUGLESANGS Experts in flow optimization

Hydra Cell seal-less diaphragm

WANNER

- High pressure
- Real cost reductions
- Seal-less
- API

Typical applications and market:

Water, seawater, sludge, MEG, chemicals, dosage, injection. Process, Oil&gas, Machining.

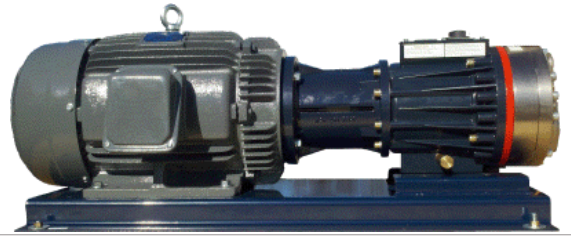

Gear pumps

TUTHILL

- Std design
- Heavy duty design
- Magnet
- Micro

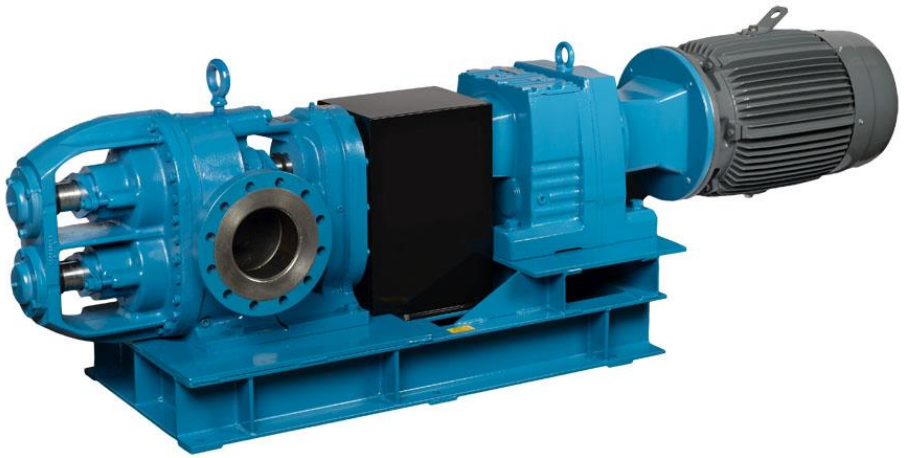

Typical applications and market:

Bitumen, molasses, oils, high viscosity, oil-based blends.

Process, Oil&Gas, Machining.

POSITIVE DISPLACEMENT PUMPS

Fluid transfers Mouvex and Abaque

BLACKMER

- Vane
- Eccentric disc
- Hose/persistaltic

Typical applications and market:

Water, chemicals, refined products, sludge, viscous products, oils. Process, oil & gas, food, pharmaceutical, fish, wastewater, treatment plant.

SEALING PRODUCTS

- Mechanical seals
- Braided packings & gaskets
- Polymers & Elastomers
- Upgrade program
- Services, support, softwares

SEALING PRODUCTS

CHESTERTON
Global Solutions, Local Service.

FUGLESANGS
Experts in flow optimization

Split seal 442C

High performance

- High pressure capacity
- Vacuum capacity
- Wide application

Quick & easy assembly

- No dismanting
- Mounting as a cassette
- Universal fit

S10 simple

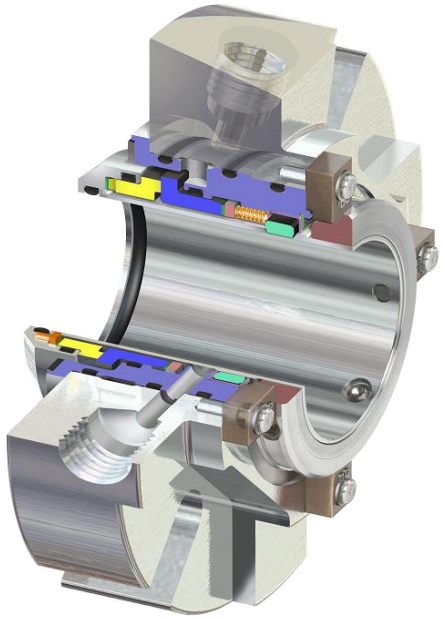

- Stationary design
- Manages high torque
- Quench and drainage
- Cassette system

S20 double

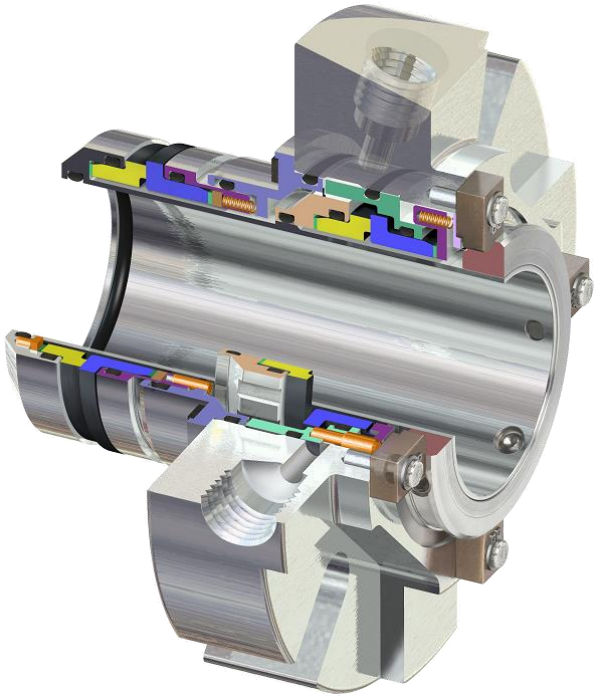

- Tandem execution
- Pumping ring
- Stationary design
- Low friction
- Cassette system

FUGLESANGS
Experts in flow optimization

SPIRALTRAC

For compression packing

Shared version
for split seals

For mechanical seals

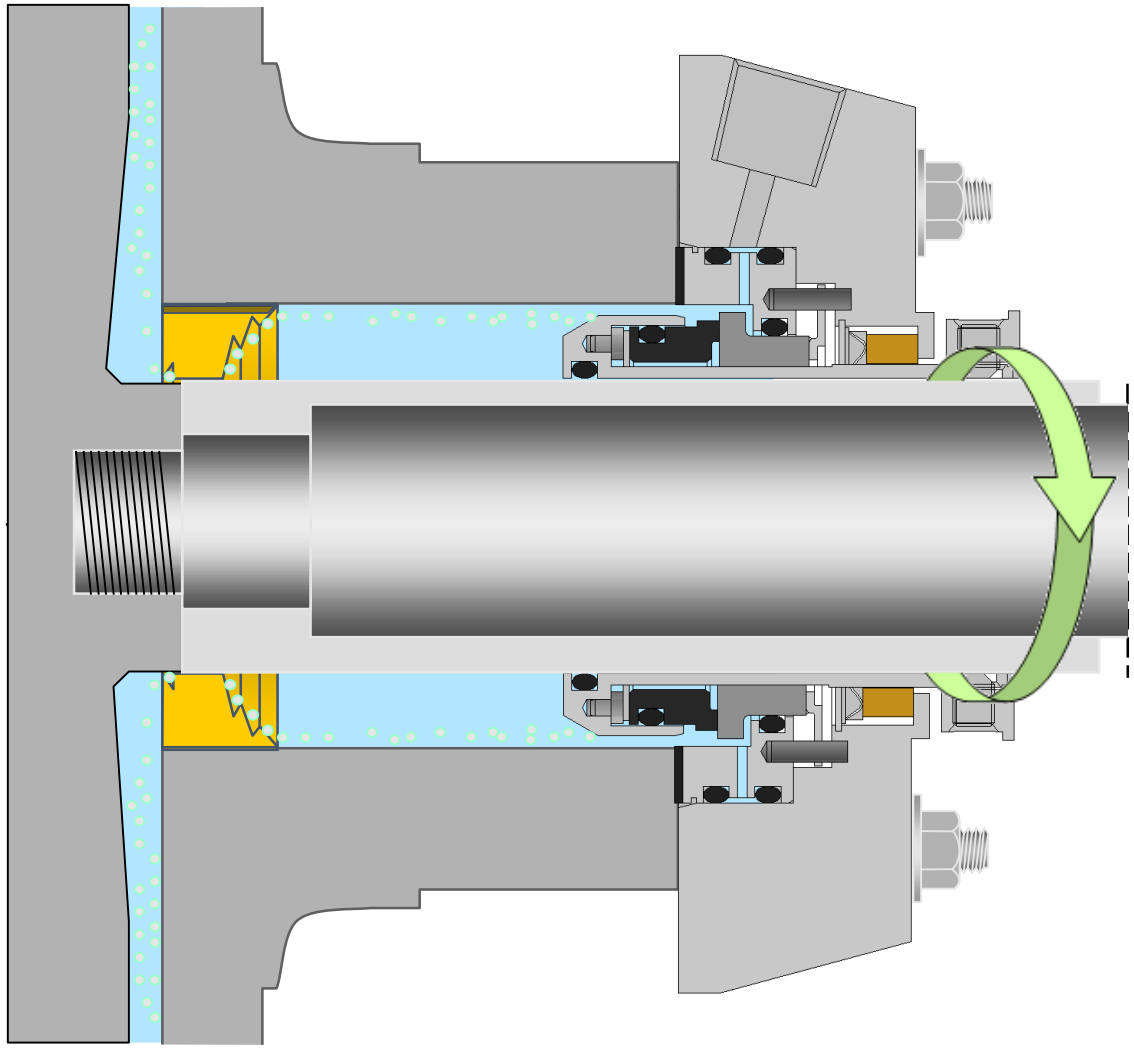

LAGERAVTETNING

Labyrinth seal

- 316 SS
- No wear
- No damage to the shaft

GBS Gearbos alignment

- Mechanical seal
- Totally close to 1 bar
- Patented single mounted
- No damage to the shaft

COMPOSITE COATING

- Use of ARC composites can help increase the durability and durability of concrete and metal applications considerably.
- Energy optimization
- Make concrete and metal resistant to erosion, corrosion and wear
- Wear in pipes screws, fans and pumps
- Thin and thick film

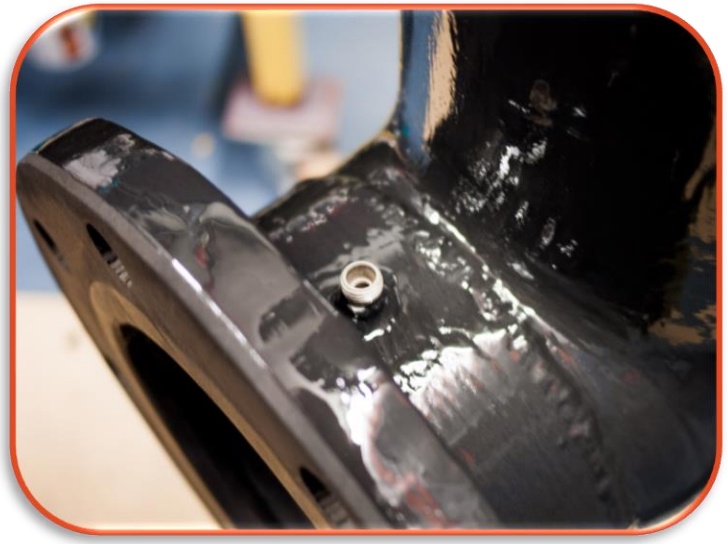

COMPOSITE COATING

Repair and coating of sewage pumps.

COMPOSITE COATING

FUGLESANGS
Experts in flow optimization

Energy optimization and upgrading.

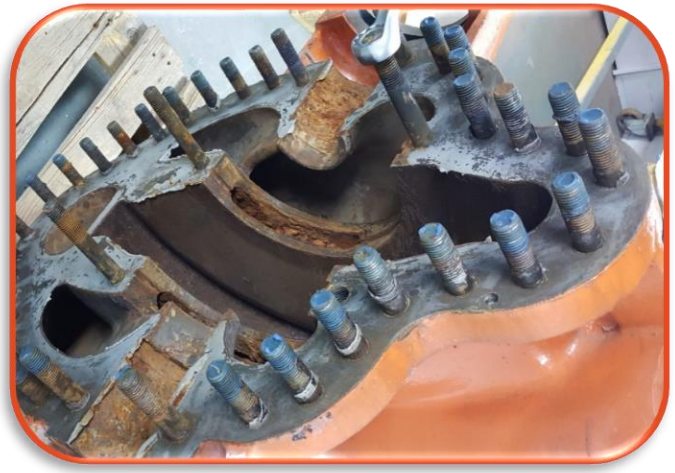

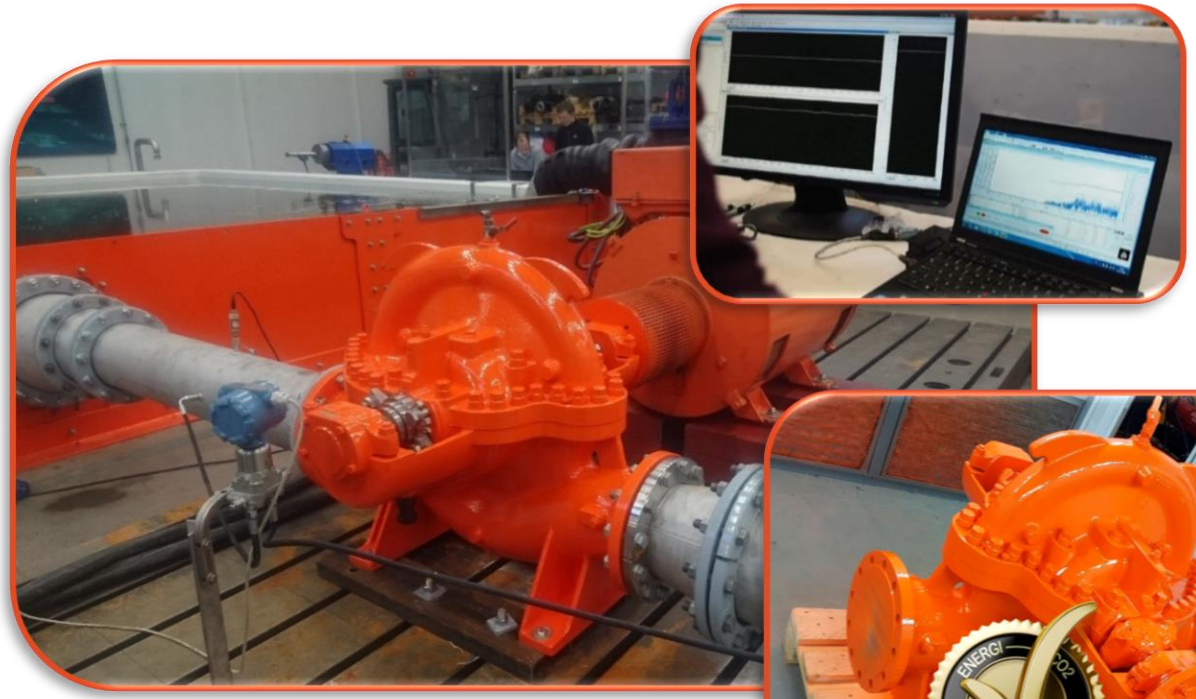

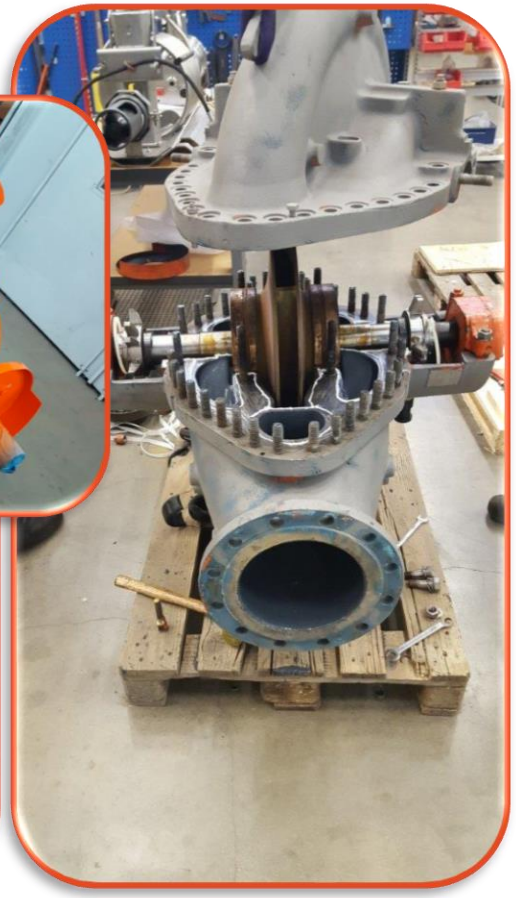

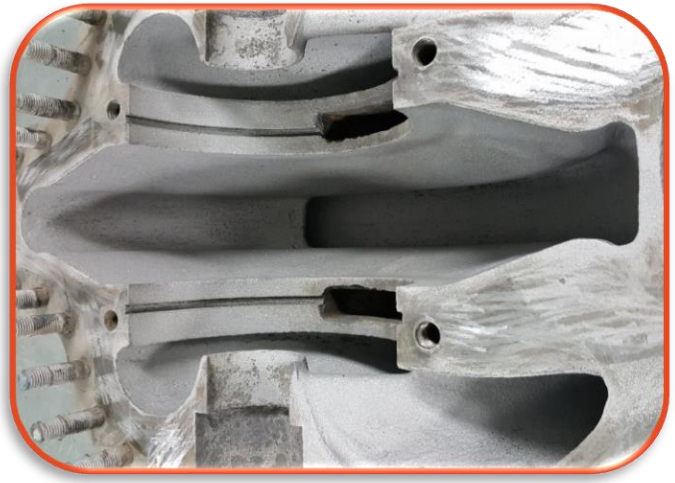

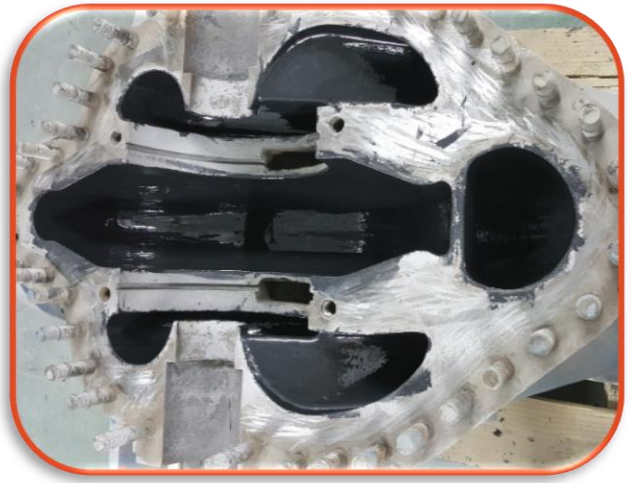

TECHNICAL PRODUCTS

CHESTERTON
Global Solutions, Local Service.

FUGLESANGS
Experts in flow optimization

Cleaning agents

Lubricants

For bearings

Concrete & Corrosion protection

Assembly Disassembly aids

HYDRAULICS

- Located in Borlänge - Sweden
- Arcos has more than 40 years of experience as a supplier of cylinders for the industry.
- Delivers complete solutions adapted to customer´s wishes and needs.
- Full documentation Autocad drawings with all dimensions of components.

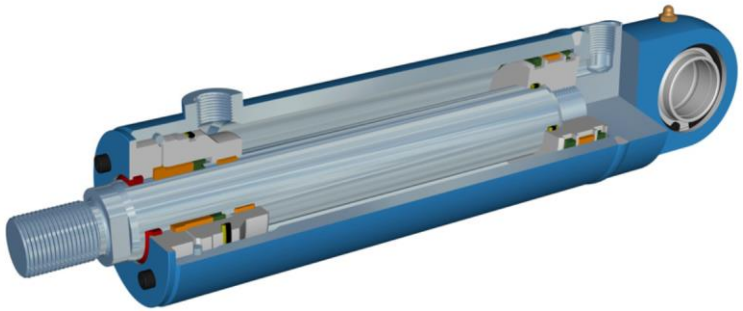

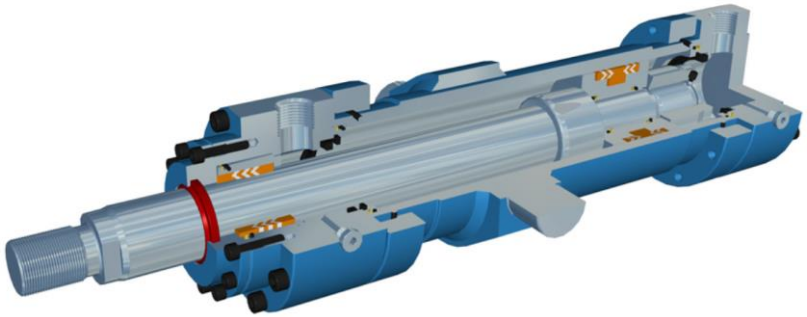

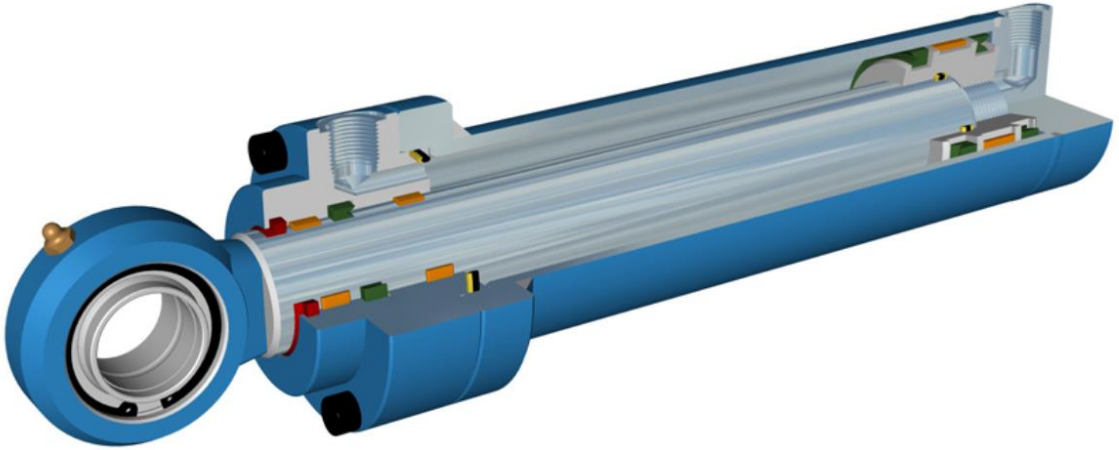

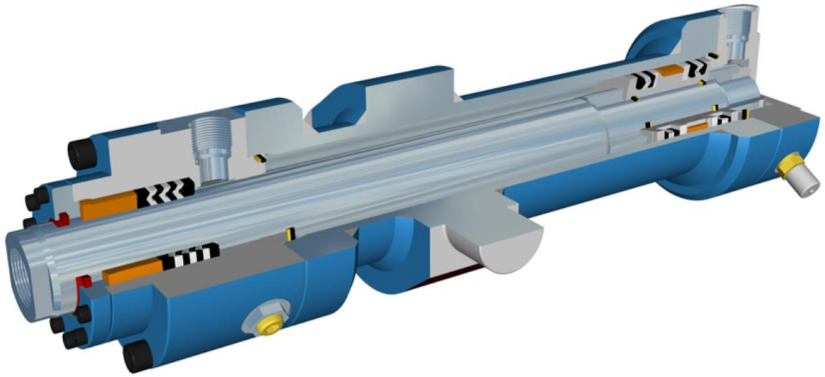

Who are we?

FUGLESANGS
Experts in flow optimization

SERVICE

- Service Agreements
- Upgrades and improvements
- Mechanical seals workshop

COATING

- Amplifier / Protects steel and concrete
- Easier maintenance
- Longer life

KNOWLEDGE

- Technical maintenance on pumps
- World Class Maintenance
- Interne courses

SERVICE AND MAINTENANCE

- Renovation of hydraulics and pneumatic cylinders
- Renovation of pumps and rotating equipment
- Renovation of mechanical shaft seals
- Service agreements
- Maintenance responsability
- Laser creation servive
- Composite Service

KNOWLEDGE COMPANY

- Operation and maintenance «Pumps & mechanical seals»
- Future maintenance
- Selection and design of pump and sealing system
- Chesterton sealing technique, pumps and mechanical seals.

Norsk Forening for Vedlikehold

FUGLESANGS
Experts in flow optimization

Experts in flow optimization

FUGLESANGS AS
Caspar Storms Vei 21
0664 OSLO
NORWAY

www.fuglesangs.no
+47 22 54 20 00
office@fuglesangs.no