Installation & Servicing Instructions

i15R
i18R
i24R
i32R
i40R

Open Vent System

Natural Gas Boilers

Boiler	*G.C No*
i15R	41-310-49
i18R	41-310-50
i24R	41-310-51
i32R	41-310-52
i40R	41-310-53

CE PIN 0063CQ3634

8G.51.85.01 / 03.19 *Changes reserved. E.& O. E.*

These instructions are to be retained by the user.

Explanation of the Buttons

	Selector Wheel	**Turn** the wheel left or right to scroll through available menu options
	OK button	**Press** to select/confirm an item
	BACK button	**Press** to go back one screen
	RESET button	**Press** to reset a fault code
	Commissioning button	**Press** to enter into service mode which allows adjustment of high fire/low fire and CO^2 settings **(Do not use. For service purposes only)**

Explanation of the Control panel

When the boiler is turned on, the main screen (also called the home screen) appears in the screen.

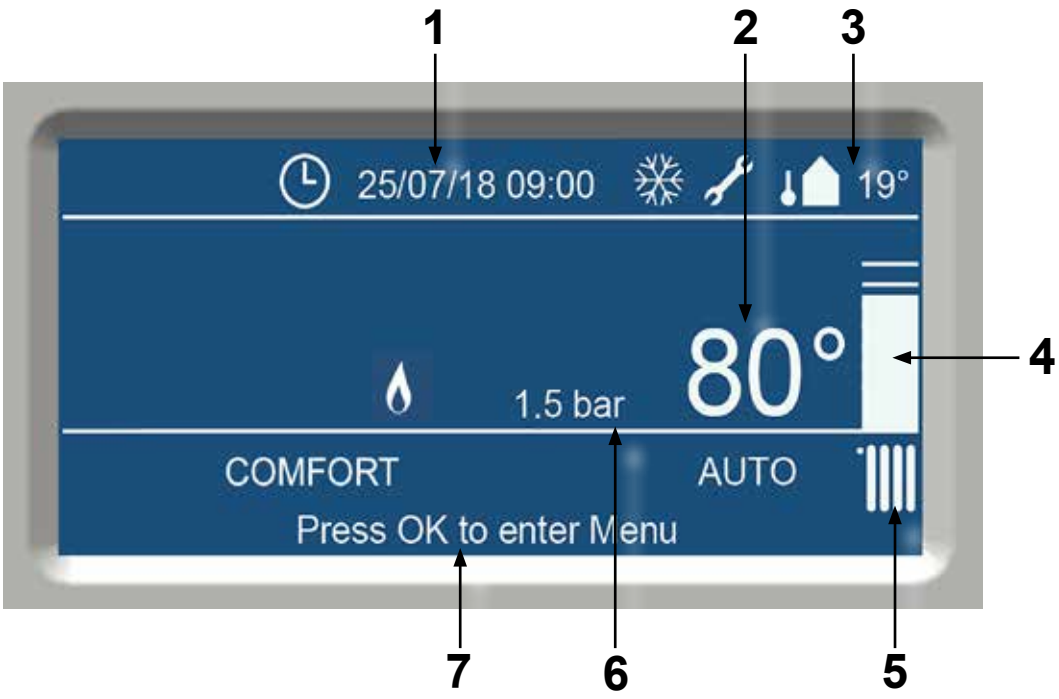

1 Current date and time

2 Heating supply setpoint

3 Outdoor temperature (if connected)

4 Visual illustration of current central heating temperature. Scale changes as the set temperature is changed

5 Central heating status symbol. A box around the radiator symbol indicates central heating is in operation

6 Current central heating system water pressure

7 Boiler status indicator, such as "Press OK to enter Menu", error messages and other status information

See chapter 12 for more information about button functions and read-out.

Contents

1 Introduction 5
2 Rules & Regulations (Symbols) 6
3 Technical specifications 8
4 Dimensions 9
5 Delivery package 10
6 Boiler description 10
7 Boiler photo components list 11
8 Mounting boiler frame 12
8.1 Wall frame 13
9 Connecting boiler 14
9.1 Open vent heating system 14
9.2 Water quality 15
9.3 Heating systems with plastic pipes 16
9.4 Gas connection in general 17
9.4.1 Natural gas connection (NG) 17
9.4.2 Propane gas connection (LPG) 17
9.4.3 House pressure regulator 18
9.4.4 Dimensioning of the low pressure gas line 18
9.4.5 De-aerating the LPG tank 18
9.5 Condensation drain pipe 19
9.6 Flue gas exhaust system 23
9.6.1 Flue terminal locations 24
9.6.2 Dimensioning of the flue gas and air intake duct 27
9.7 Fitting the boiler onto the boiler frame 29
10 Electrical connection 31
10.1 External safety contact 32
10.2 DHW sensor connection 32
10.3 OpenTherm BUS & ON / OFF connection 32
10.4 ATAG Zone connection 32
10.5 Solar inlet sensor connection 32
10.6 ATAG Outside sensor 32
10.7 230V Out (230V live output) 32
10.8 230V In (230V live input) 32
10.9 230V Control Block (230V live output) 33
10.10 230V Control Block (SwL Switched live) 33
10.11 External pump (230V live output) 33
10.12 Electrical diagram 34
11 Filling system 35
12 Boiler controls 35
12.1 Change the Central Heating setpoint temperature 36
12.2 Change the language on the screen 37
12.3 Change the time and date 38
12.4 Change Units of Measurement 39
12.5 Boiler information 40
12.6 Pump function 42
13 Commissioning the boiler 43
13.1 Checking the CO_2 45
13.2 CO and combustion checks 48
14 Parameter chapter 50
14.1 Change the settings 50
14.2 Parameter listing 51
14.3 Weather compensation 53
14.3.1 Setting the weather compensation 54
15 Routine servicing 56
15.1 Interim Service 56
15.2 Full Service 57
15.3 Component replacement 61
15.4 User's instructions 61
15.5 Warranty 61
16 Error codes and fault finding 62
16.1 Reset a Fault code 63
16.2 View Error code History 64

Annex A System water additives 65
Annex B Declaration of conformity 66
Annex C Short parts list 67

Work on the installation should only be carried out by qualified personnel with calibrated equipment and

1 Introduction

These instructions describe the functioning, installation, use and primary maintenance of ATAG central heating boilers for the United Kingdom.

These instructions are intended for the use of Gas Safe registed installers in connection with the installation and putting into operation of ATAG boilers. It is advisable to read these instructions thoroughly, well in advance of installation. Separate instructions for use are supplied with the boiler for users of ATAG central heating boilers. ATAG is not liable for the consequences of mistakes or shortcomings which have found their way into the installation instructions or user's manual. Further, ATAG reserves the right to alter its products without prior notification.

When delivering the boiler, give the customer clear instructions concerning its use; present the customer with the user's manual and warranty card.

Each boiler is fitted with an identification plate. Consult the details on this plate to verify whether the boiler is compliant with its intended location, e.g.: gas type, power source and exhaust classification.

On completion of the installation the installer or commissioning engineer must fill out and complete the Benchmark Commissioning Checklist found on page 70 of this manual and hand this to the customer for future record keeping. The Benchmark Service Record must also be completed by the service agent following each service call, and return to the customer.

2 Rules & Regulations (Symbols)

The following regulations apply to installation of ATAG central heating boilers:

Legislation and Regulations.
Gas Safety (Installation and Use). All gas appliances must by law, be installed by a competent person, eg. Members of Gas Safe Register and in accordance with the current Gas Safety Regulation. Failure to install appliance correctly could lead to prosecution.
All Gas Safe registered installers carry a Gas Safe ID card and have a registration number. You can call Gas Safe Register directly on 0800 408 5577.

In addition to the above regulations this appliance must be installed in compliance with the current IEE Regulations and Building Regulations. Regulations and bye laws of the Local Water Authority and the Current Health and Safety Regulation.

The Benchmark Scheme
Benchmark places responsibilities on both manufacturers and installers. The purpose is to ensure that customers are provided with the correct equipment for their needs, that it is installed, commissioned and serviced in accordance with the manufacturer's instructions by competent persons and that it meets the requirements of the appropriate Building Regulations. The Benchmark Checklist can be used to demonstrate compliance with Building Regulations and should be provided to the customer for future reference.

Installers are required to carry out installation, commissioning and servicing work in accordance with the Benchmark Code of Practice which is available from the Heating and Hotwater Industry Council who manage and promote the Scheme.
Visit www.centralheating.co.uk for more information.

The current Electricity at Work Regulation must be complied with and also be in accordance with the relevant and current editions of the British Standards.
The ATAG iR boiler is a certified appliance and must not be modified or installed in any way contrary to this Installation Manual. Manufacturers instructions must not be taken, in any way, as overriding statutory obligations.
The ATAG iR boiler is a central heating boiler for "open" expansion tank systems (open vent) only. The boiler must be connected according to these instructions and all installation norms in respect of the part of the boiler to be connected.

⚠ **The appliance is not to be used by children or persons with reduced physical, sensory or mental capabilities, or lack of experience and knowledge, unless they have been given supervision or instruction.**

⚠ **Children being supervised not to play with the appliance.**

Observe the following rules of safety:
- All work on the boiler must take place in a dry environment.
- ATAG boilers may never be in operation without their housing, except in connection with maintenance or adjustments (see Chapter 15 and 16).
- Never allow electrical or electronic components to come into contact with water.

Carry out the following tasks in connection with maintenance, etc. to an already-installed boiler:
- Shut down all programs
- Close the gas isolation valve
- Shut down the 230V power supply

See chapter 15 and 16 for further instructions.

Take note of the following when maintenance or adjustments are needed:

- The boiler must be able to function during these activities; for this reason, the boiler's 230V power supply, gas pressure and water pressure must be maintained. Ensure that there is not a source of potential danger during these activities.

Following maintenance or other activities; always check the installation of all parts through which gas flows (using leak detection spray).

The following (safety) symbols may be encountered in these installation instructions and on the boiler (packaging):

Boiler must be stored away from frost.

Protect packaging and/or contents from damage as a result of insufficient care taken during transport.

Protect the boiler from weather conditions during transport and storage whilst still in its packaging.

If and how to clamp when using transport trucks with clamp equipment.

If and how to transport when using a rolling jack.

The whole packaging is made of recycled materials and can be recycled again.

Transport and place the boiler in its packaging in this position.

Do not to step on or stand on the package.

An assembly or dismantling must be carried out.

Pay extra attention in connection with a particular operation.

Useful tip or advice

3 Technical specifications

Technical specifications Natural gas

		ATAG iR-Series				
Boiler type		**i15R**	**i18R**	**i24R**	**i32R**	**i40R**
Type heat exchanger		iCon1	iCon1	iCon1	iCon2	iCon2
CE product identification number (PIN)				0063CQ3634		
Country of destination				UK		
Q_{min} input min. CH (Hi)	kW	4.5	4.5	4.5	6.2	6.2
Q_n input nominal CH (Hi)	kW	13.5	16.2	21.6	28.8	36.0
Q_r adjusted input CH (Hi)	kW	13.5	16.2	21.6	28.8	36.0
Q_{min} input min. CH (Hs)	kW	5.0	5.0	5.0	6.9	6.9
Q_n input nominal CH (Hs)	kW	15.0	18.0	24.0	32.0	40.0
P_{min} output min. CH (50/30°C)	kW	5.0	5.0	5.0	6.9	6.9
P_n output nominal CH (50/30°C)	kW	14.7	17.5	23.2	31.2	38.8
P_{min} output min. CH (80/60°C)	kW	4.4	4.4	4.4	6.1	6.1
P_n output nominal CH (80/60°C)	kW	13.3	15.9	21.2	28.3	35.3
NO_x class EN15502-1				6		
O_2 (full load)	%			4.7		
CO_2 (full load)	%			9.0		
Appliance type				B23, B33, C13, C33, C43, C53, C63, C83, C93		
Flue gas temperature class				T100		
Max. flue resistance at Qnw/Qn	Pa	42	60	106	83	130
Flue gas temperature CH (80/60°C full load)	°C			59		
Flue gas temperature CH (50/30°C full load)	°C			34		
Flue gas mass flow (full load)	g/s	5	6	9	11	14
Flue gas temperature CH (36/30°C low load)	°C	30	30	30	30	30
Gas categories				II_{2H3P}		
Gas pressure 2H / 3P	mbar			20 / 37		
Gas consumption max. G20	m3/hr	1.43	1.72	2.29	3.05	3.81
Current	V/Hz			~ 230/50		
Degree of protection acc. EN 60529				IPX4D (B22/B33 IPX0D)		
Overrun time pump CH	sec			60		
Flow temperature max.	°C			80		
SAP Annual Efficiency NG	%	89.8	89.8	89.8	89.8	89.8
Weight boiler + jig (empty)	kg	32	32	35	35	35

Technical specifications Propane (3P)

		ATAG iR-Series				
Boiler type		**i15R**	**i18R**	**i24R**	**i32R**	**i40R**
Type heat exchanger		iCon1	iCon1	iCon1	iCon2	iCon2
O_2 (full load)	%			5.1		
CO_2 (full load)	%			10.3		
Pre pressure	mbar			37		
Input CH (Hi)	kW	13.5	16.2	21.6	28.8	36.0
Gas consumption max. G31	kg/h	0.96	1.15	1.54	2.05	2.56
Gas consumption max. G31	m3/h	0.51	0.61	0.81	1.08	1.35
Modulation range CH (80/60°C)	kW	8.3 - 13.3	8.3 - 15.9	8.3 - 21.2	19.1 - 28.3	19.1 - 35.3
Modulation range CH (50/30°C)	kW	9.0 - 14.7	9.0 - 17.5	9.0 - 23.2	20.8 - 31.2	20.8 - 38.8

ErP specifications according to European Guideline 2010/30/EU

Brand		ATAG				
Boiler type		**i15R**	**i18R**	**i24R**	**i32R**	**i40R**
Condensing boiler		yes	yes	yes	yes	yes
Combination heater		yes	yes	yes	yes	yes
Seasonal space heating energy efficiency class CH		A	A	A	A	A
P_n Power output	kW	13	16	21	28	35
Q_{HE} Annual energy consumption	GJ	43	52	69	92	115
η_s Seasonal space heating energy efficiency CH	%	94	94	94	94	94
L_{WA} Sound power level, indoors	dB	37	43	46	48	54
P_4 nominal output (80/60°C)	kW	13	16	21	28	35
P_1 30% of nominal output (36/30°C)	kW	4	5	7	10	12
η_4 efficiency at nominal input (GCV)	%	89	89	88	89	88
η_1 efficiency at 30% of the nominal heat input (GCV)	%	99	99	99	100	99
el_{max}	kW	0.023	0.028	0.036	0.040	0.046
el_{min}	kW	0.005	0.005	0.005	0.005	0.005
P_{SB}	kW	0.004	0.004	0.004	0.004	0.004
P_{stby} heat loss	kW	0.055	0.055	0.055	0.055	0.055

4 Dimensions

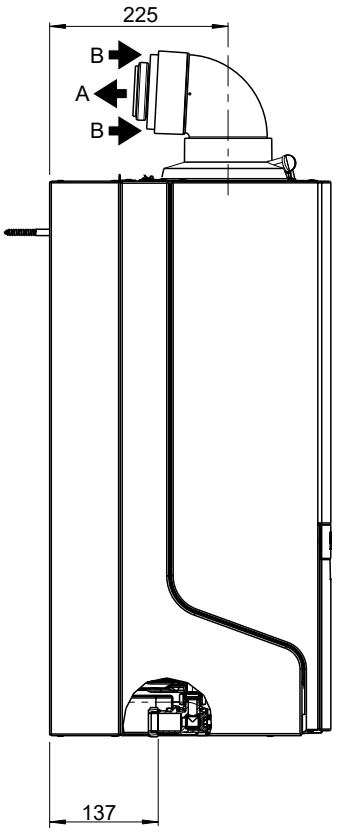

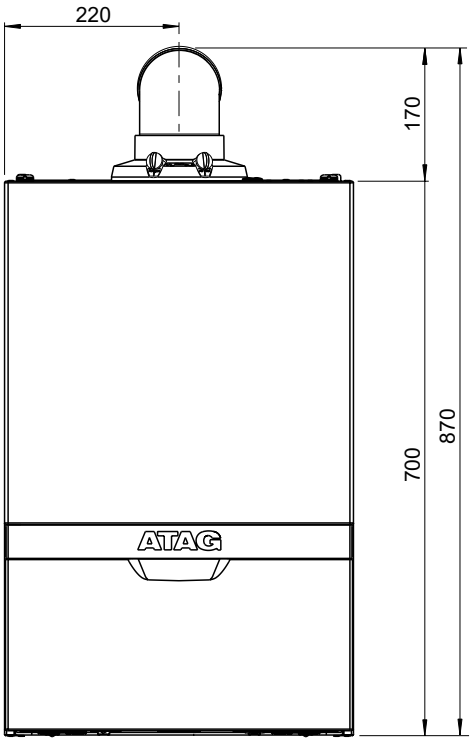

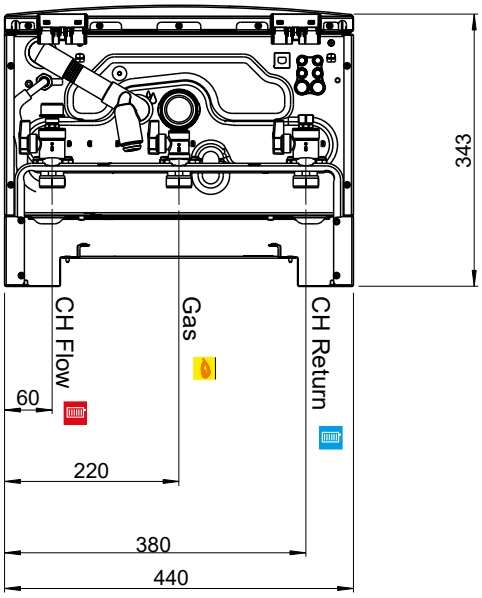

			ATAG iR-Series				
			i15R	i18R	i24R	i32R	i40R
Flue gas / Air intake	A/B	mm	60/100				
Gas connection		mm	22				
CH Flow connection		mm	22				
CH Return connection		mm	22				
Condensate drain connection		mm	21.5				

5 Delivery package

The delivery package of the boiler is composed as follows:
- Boiler frame;
- Boiler with cover;
- Automatic air vent (in boiler);
- Isolation valves with drainpoint (CH 2x)
- Gas isolating valve;
- Fittings consisting of plugs and screws;
- Drawing template;
- Installation instructions;
- User manual;
- Warranty Card.

The following components are not present in the boiler packaging as a standard and should be included in the installation according to the requirements:
- Flue system;
- External controls.

6 Boiler description

The ATAG iR is a room sealed, condensing and modulating CH boiler for "open" expansion tank systems (open vent).

This boiler can also be used on a sealed system with an external expansion vessel and 3 bar pressure relief valve.

The boiler is equipped with a compact stainless steel heat exchanger with smooth pipes. It is a well thought-out principle using sustainable materials.
The boiler burns natural gas to supply heat (LPG conversion kits available). This heat is transferred in the heat exchanger to the water in the CH installation. The rapid cooling off of the flue gases causes condensation. This results in a very high efficiency. The condensate that is formed, has no negative impact on the heat exchanger and it's operation, and is removed through the internal siphon. This feature requires a condensate drain pipe connected to the drain of the building.

The boiler is equipped with an intelligent control system. The boiler anticipates on the heat demand of the heating installation or hot water demand. This will cause the boiler to tune its capacity to the installation. This means that the boiler will function longer and at a low level.

CE The boiler has been tested according to valid CE standards and has a CE certificate and >88% Efficient SEDBUK 2009.

⚠ **Statement: No banned materials including asbestos, mercury, CFC's have or will not be included in the product.**

7 Boiler photo components list

ATAG iR

Figure 7.a

1	Heat exchanger	9	Flue gas exhaust	T1	Flow sensor
2	Ignition unit	10	Combustion air supply	T2	Return sensor
3	Fan unit	11	Boiler data plate	F1	Flow switch
4	Air supply damper	12	Siphon	G	Gas pipe
5	Gas valve	13	Isolation valve flow CH	A	Flow pipe CH
6	Automatic de-aerator	14	Isolation valve gas	R	Return pipe CH
7	Control unit	15	Isolation valve return CH	C	Condensation pipe
8	Control panel				

8 Mounting boiler frame

Install the boiler in a boiler room in accordance to the actual local regulations BS5440-2:2009.

The installation location of the boiler has to be, and remain, frost-free. The boiler casing is splash water tight (IPX4D) and is suitable to be installed in e.g. a bathroom.

It is NOT necessary to have a purpose provided air vent in the room or internal space in which the boiler is installed. Neither is it necessary to ventilate a cupboard or compartment in which the boiler is installed, due to the extremely low surface temperature of the boiler casing during operation. Therefore the requirements of BS5440:2 may be disregarded.

The boiler can be mounted practically to any wall with the wall frame and the enclosed fixing equipment. The wall must be flat and of sufficient strength in order to be able to carry the boiler weight with its water content. Above the boiler there must be at least 210 mm working space in order to be able to fit a horizontal concentric flue system to the rear (See chapter 9.6 for more flue options). Make sure there is sufficient service space arround the boiler according figure 8.a. The location of the boiler can be determined by using the template.

The wall frame allows the possibity to pre-fit the complete heating system before fitting the boiler. Also the flue system can be prepared. Finally fitting of the flue system is done after fitting the boiler. See next page for all options for connection the heating, condensate, flue and gas installation.

Before hanging the boiler to the boiler frame remove the front panel of the boiler first. The front panel is also the air cabinet and is attached to the boiler case with 2 fasteners (A and B) (see figure 8.a).

Always refit and turn the 2 screws tight in the fasteners A and B.

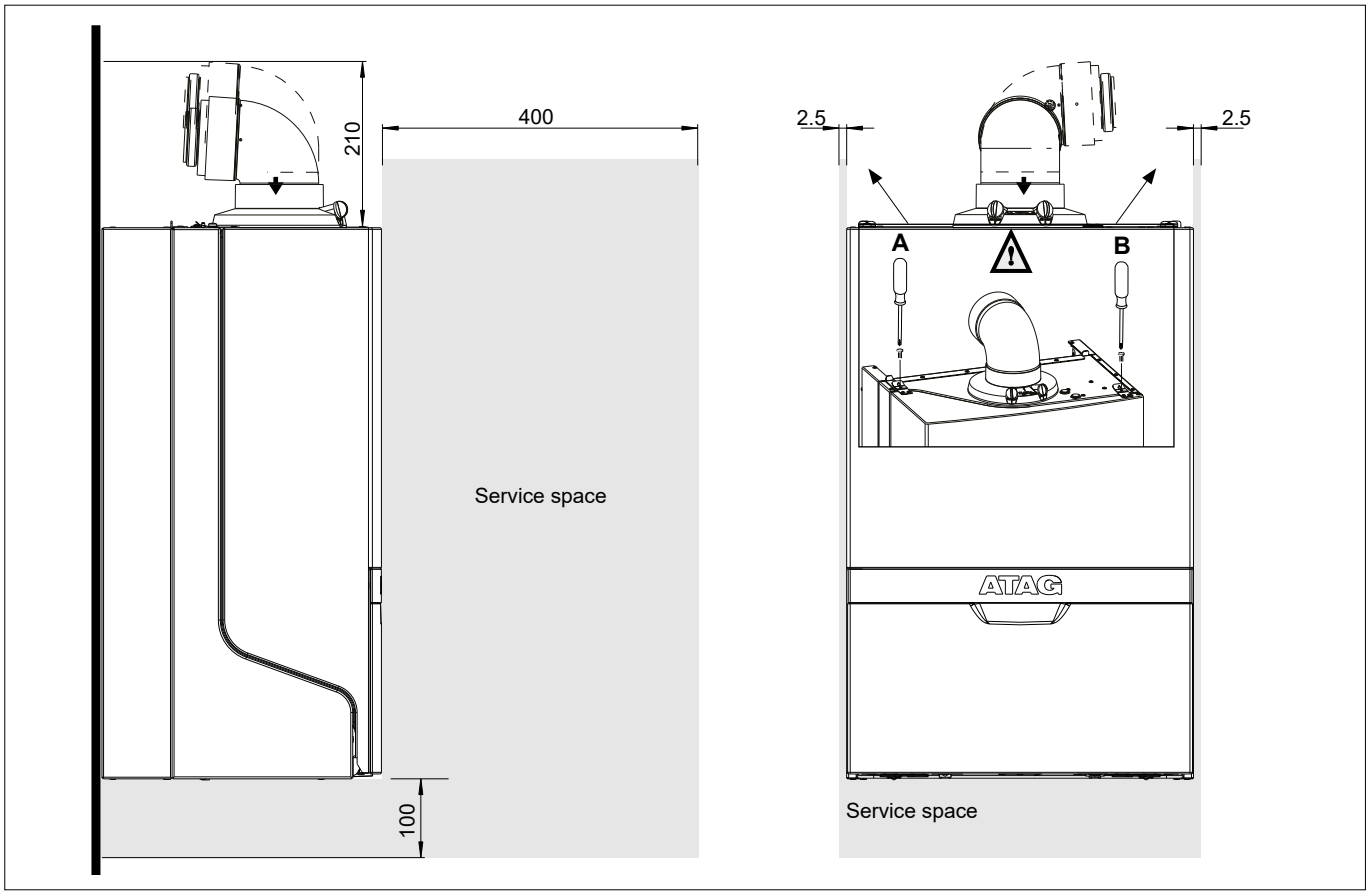

Service dimensions (in mm) *Figure 8.a*

See chapter 9.8 for further procedure to fit the boiler onto the boiler frame.

8.1 Wall frame

- Position the boiler frame against the wall using the template and a level.
- Use the level for horizontal positioning and checking the vertical position.
- Drill 4x ø10mm holes, 60mm deep
- Press the nylon wall plug (ø10x55mm) in the holes
- Mount the boiler frame to wall with the 4 coach screws (ø8x60mm) using a 13mm wrench

The boiler frame allows pipe work to be installed behind the boiler.

The pipe work must be installed at least 10mm inside the front of the frame.

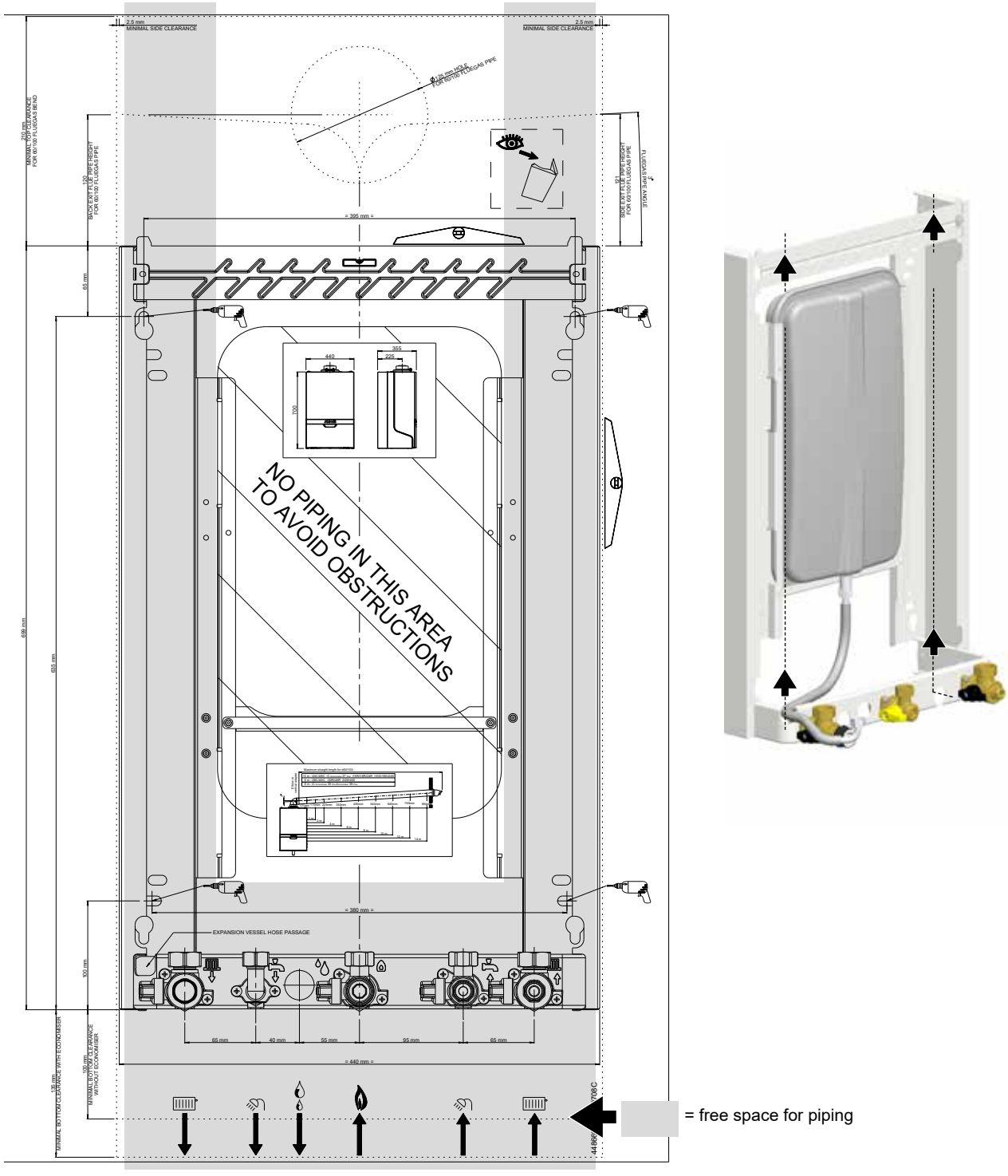

ATAG i-Serie template and boiler frame

Figure 8.1.a

9 Connecting boiler

The boiler has the following connection pipes;
- The central heating pipes.
  The boiler is provided with isolation valves on the flow and return pipe to which the installation can be connected by means of 22mm compression fittings;
- The gas pipe.
  The boiler is provided with an isolation gas valve to which the gas line can be fitted with 22mm compression fitting;
- The condensation drain pipe.
  It consists of a 25mm flexible plastic pipe. The drain pipe can be connected to this by means of an open connection;
- The flue gas exhaust system and air supply system.
  It consists of a concentric connection 60/100 mm.

See following chapters for detailed information regarding each connection.

It is advisable to clean all of the boiler's connecting pipes and/or to power flush the installation before connecting it to the boiler.

9.1 Open vent heating system

This boiler is suitable for installations that have been equipped with "open" expansion tanks (open vent).
This boiler can also be used on a sealed system with an external expansion vessel and 3 bar pressure relief valve.

Connect the central heating system according to the current regulations.

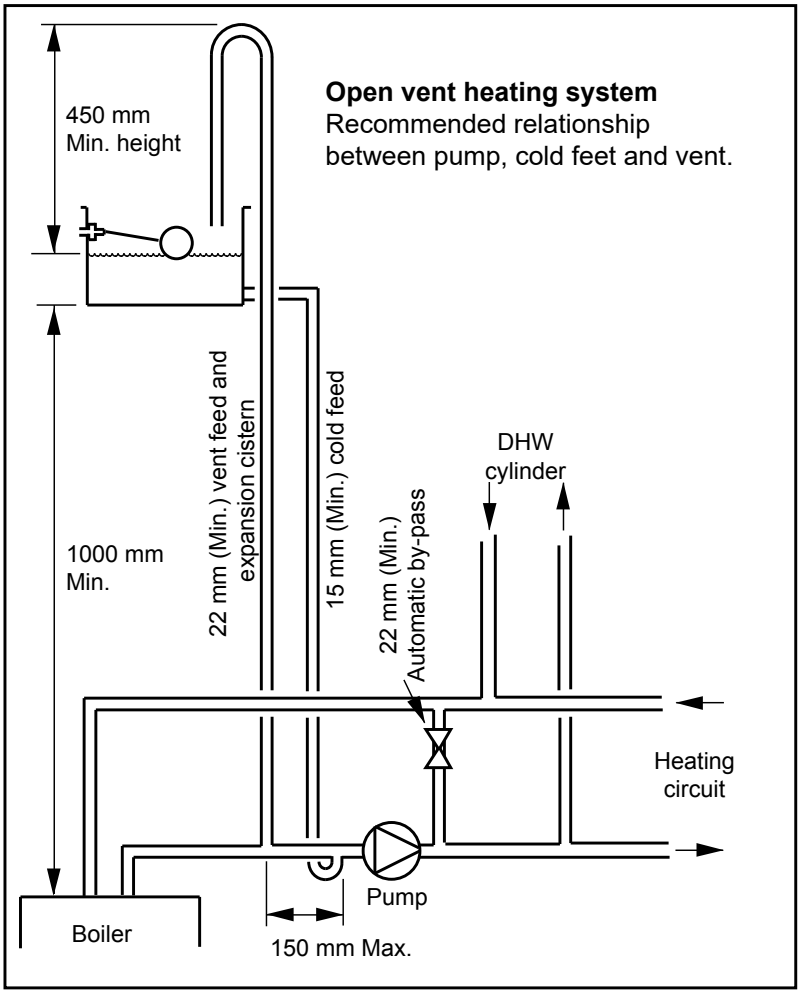

Scheme open vent system *Figure 9.1.a*

The boiler pipes can be connected to the installation by means of 22mm compression fittings. For connecting to thick-walled pipe (welded or fitted), adapters should be used.

The boiler is NOT equipped with a built-in internal filter.
Advice: ATAG Heating Technology Ltd recommend the installation of an in-line filter installed into the heating return as close to the boiler as possible. ATAG Heating Technology Ltd recommend the use of the:
ATAG iGuard Magnetic filter 22mm (Plastic) FC000100, (Brass) FC000200, 28mm (Brass) FC000250.

Additives in the installation water are only permitted in consultation with the country distributor. See chapter 9.2 for detailed information.

9.2 Water quality

Fill the installation with mains cold water.

In most cases, a heating system can be filled with water according to national standards for water and treatment of this water is not necessary.
In order to avoid problems with the CH-installations, the quality of the filling water has to meet the specifications mentioned in table 9.2.a:
If the filling water does not meet the required specifications, you are advised to treat the water to such an extent that it does meet the required specifications.

The warranty becomes invalid, if the installation is not being flushed and/or the quality of the filling water does not meet the specifications recommended by ATAG Heating Technology Ltd. Always contact ATAG Heating Technology Ltd in advance, if things are not clear or you wish to discuss any deviations. Without approval, the warranty becomes invalid.

Installation:
- The use of groundwater, demi-water and distilled water is prohibited. (on the next page you will find an explanation of these definitions)
- If the mains water quality meets the specifications mentioned in table 9.3.a, you can start flushing the installation before installing the device.
- Whilst flushing, corrosion products (magnetite), fitting products, cutting oil and other undesirable products have to be removed.
- Another possibility is to remove the pollution by installing a filter. The filter type has to fit the type and grain size of the pollution. ATAG Heating Technology Ltd recommends filter usage.
- In this case, the whole piping system should be taken into consideration.
- The CH-installation has to be properly vented before using the system. For that purpose, we refer to the commissioning chapter.
- If a regular water top up is required (>5% on an annual basis), then there is a structural problem and an installer has to solve the problem. Regularly adding fresh water to the system also adds additional calcium and oxygen implying that magnetite and calcium residues can continue. The result may be blockages and/or leakages.
- The use of anti-freeze and other additives requires periodical quality checks of the filling water in accordance with the period laid down by the additives supplier.
- Chemical additions are to be avoided and should only be used after ATAG Heating Technology Ltd has approved their corresponding use.
- Should you wish to achieve the required water quality by using chemical additives, then this is your own responsibility. The warranty on the product delivered by ATAG Heating Technology Ltd expires, if the water quality does not meet ATAG Heating Technology's specifications or the chemical additives have not been approved by ATAG Heating Technology Ltd.
- On installation and during additions or changes at a later stage, ATAG Heating Technology Ltd recommends to keep a record of the type of water used, its quality at the time, and if applicable, which additives and quantities were added.

Parameter	Value
Water type	Potable water Softened water
pH	6.0-8.5
Conductivity (at 20°C in µS/cm)	Max. 2500
Iron (ppm)	Max. 0.2
Hardness (°dH / ppm):	
Installation volume/capacity <20 l/kW	1-12 °dH / 17-214 ppm
Installation volume/capacity >=20 l/kW	1-7 °dH / 17-125 ppm
Oxygen	No oxygen diffusion allowed during operation. Max. 5% filling water addition annually
Corrosion inhibitors	Refer to Additives Attachment
pH increasing or lowering agents	Refer to Additives Attachment
Anti-freeze additives	Refer to Additives Attachment
Other chemical additives	Refer to Additives Attachment
Solid substances	Not allowed
Residues of processing water not forming part of the drinking water	Not allowed

table 9.2.a

Water type definition:

Potable water: Tap water compliant with the European drinking water guideline: 98/83/EG dated 3 November 1998.
Softened water: Water with partly de-ionised calcium and magnesium.
Demi-water: Virtually completely demineralised water (very low conductivity)
Distilled water: Water no longer containing minerals.

9.3 Heating systems with plastic pipes

When connecting or using an underfloor heating system, designed with plastic pipes, or plastic pipes are used elsewhere in the installation, one should ensure that the plastic pipes used comply with the DIN 4726/4729 standard. It is set out in this standard that the pipes may not have oxygen permeability higher than 0.1 g/m³.d at 40°C. If the system does not comply with this DIN standard, the underfloor heating component will have to be separated from the central heating appliance by means of a plate exchanger.

⚠ **No recourse can be made to the terms of the warranty in the event of failure to observe the regulations pertaining to plastic underfloor heating pipes.**

9.4 Gas connection in general

The local gas supplier should be consulted, at the installation planning stage, in order to establish the availability of an adequate supply of gas. An existing service pipe must NOT be used without prior consultation with the local gas supplier.

ATAG supplies boilers suitable for natural gas only and boilers for LPG only. Verify the identification plate on the boiler if the boiler is suitable for the gas kind on site. The boilers cannot be converted to another kind of gas.

Make sure that the gas pipe work does not contain dirt, particularly with new pipes.

The complete installation MUST be tested for gas tightness and purged as described in the above code.

The boiler connection is provided with an isolation valve with 22mm compression fitting, into which the gas line can be fitted.

Ensure that the pipework from the meter to the appliance is of adequate size. Do not use pipes of a smaller diameter than the boiler gas connection (22mm).

9.4.1 Natural gas connection (NG)

The gas supply must comply to the current Gas Safety, Installation & Use Regulations, in accordance with BS.6891.

The nominal inlet working gas pressure measured at the appliance should be 21 mbar +/- 2 mbar for Nat gas (G20). Allowing for the acceptable pressure loss of 1 mbar across the installation pipework, it can be assumed that a minimum permitted operating pressure of 18 mbar will be delivered to the inlet of the appliance. (Reference BS 6400-1 Clause 6.2 Pressure Absorption). When tested at the gas valve, the pressure drop from the meter to the gas valve must not be more than 4.0 mbar.

9.4.2 Propane gas connection (LPG)

The LPG installation must comply to the current Gas Safety, Installation & Use Regulations, in accordance with BS:6891.

Installing of a LPG installation should only be done by a registered LPG installer.

The tank must be provided with a high pressure regulator with a minimum capacity of 24 kg/h to reduce the tank pressure from 5 to 1.5 bar. The 1.5 bar high pressure gas line should have a minimum diameter of 15mm. In the high pressure gas line a house pressure regulator must be installed. When tested at the gas valve, the pressure drop from the pressure regulator to the gas valve must not be more than 2.5 mbar.

9.4.3 House pressure regulator

Each gas appliance which is connected to the propane installation must be provided with its own house pressure regulator. The house pressure regulator is a third party delivery.

The house pressure regulator must have a minimum capacity of 10 kg/h / 37 mbar and a CE certification.

ATAG advices to install the house pressure regulator as close as possible to the boiler. When placing the regulator inside, a discharge drain of ø6mm must be installed. The discharge drain must be directed outdoor. In case of a discharge the gasses will go outside.
If fitting the regulator outside the regulator should be protected against influences of the weather. The (de-) aeration must be positioned downwards (see figure 9.5.3.a).
ATAG advices to install measure points on all gas line parts to have the possibility to check for pressure loss.

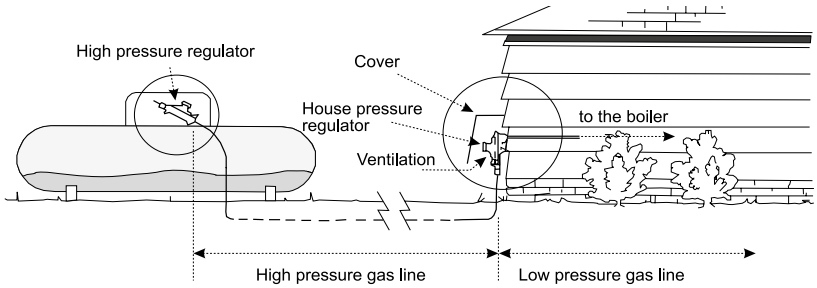

example propane installation *figure 9.4.3.a*

Pre-pressure must be adjusted to 37 mbar by means of the house pressure regulator. The maximum permitted closing pressure may be 5 mbar higher than the maximum pre-pressure.

A too high closing pressure in the low pressure gas line can be caused by a high resistance or jam in this gas line. When the closing pressure keeps increasing the valve in the regulator is not closing correctly. In this case the regulator should be replaced.

9.4.4 Dimensioning of the low pressure gas line

The gas line from the house pressure regulator to the boiler must have the dimensions according the table below.

Boiler type	i15R	i18R	i24R	i32R	i40R
Diameter gas line	m	m	m	m	m
ø15mm	-	-	-	-	-
ø22mm	18	18	18	18	18
ø28mm	30	30	30	30	30

9.4.5 De-aerating the LPG tank

When placing a new or revised LPG tank the tank must always be de-aerated.

ATAG advices to inform the gas supplier that a central heating boiler is connected to the LPG tank. For the boiler it is absolutely necessary that the tank is free of air. When not the boiler will give ignition problems and will not function.
ATAG advices to measure the content of O_2 . This value should be lower than 1.3%. Contact the gas supplier in case of doubt.

9.5 Condensation drain pipe

The ATAG condensing boiler has the >88% Efficient SEDBUK 2009 for high energy efficiency in heating and domestic hot water. The ATAG wall hung gas fired condensing boiler contain a siphonic condensate trap to collect and realease condensate. The amount of condensate formed is determind by the type of boiler and the water temperature produced by the boiler.

Condensate pipework.
Use plastic pipework of an internal diameter no less then 19mm ID (typically 22mm OD).

Routing of the pipework,
The condensate pipework must fall at least 45mm per metre away from the boiler, taking the shortest practicle route to the termination point.
Support the pipe at least every 50 cm for near horizontal sections and 1 metre for vertical sections.
Wherever possible, the condensate pipework should be routed internally to prevent freezing. In order to minimise the risk of freezing during prolonged very cold spells, one of the following methods of terminating condensate drainage pipe should be adopted.

Internal pipework
Wherever possible, the condensate drainage pipe should be terminated at a suitable internal foul water discharge point such as (a) an internal soil and vent stack or (b) an internal kitchen or bathroom waste pipe, washing machine waste pipe etc. A suitable permanent connection to the foul waste pipe should be used. Figures 9.5.1, 9.5.2(a), 9.5.2(b) show appropriate connection methods.
The possibility of waste pipes freezing downstream of the connection point should be considered when determining a suitable connection point - e.g. a slightly longer pipe run to an internal soil stack may be preferable to a shorter run connecting into a kitchen waste pipe discharging directly through the wall to an external drain.
Where “gravity discharge” to an internal termination is not physically possible (e.g. the discharge point is above the appliance location, or access is obstructed by a doorway), or where very long internal pipe runs would be required to reach a suitable discharge point, the following measures may be adopted.

Use of a condensate pump (to an internal termination):
Condensate can be removed using a proprietary condensate pump (third party delivery), of a specification recommended by the pump manufacturer.
The pump outlet should discharge to a suitable internal foul water discharge point, such as (a) an internal soil and vent stack or (b) an internal kitchen or bathroom waste pipe, washing machine waste pipe etc. Figure 9.5.3 shows a typical connection method.
A suitable permanent connection to the foul waste pipe should be used and the manufacturer’s detailed installation instructions for the pump should be followed.

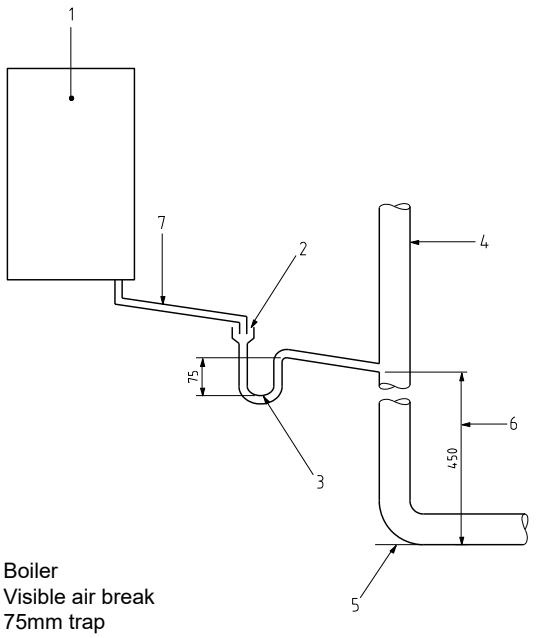

1 Boiler
2 Visible air break
3 75mm trap
4 Visible air break and trap is not required because there is a trap with a condensate seal of 180mm incorporated into the boiler (minimum requirement is 75mm)
5 Soil and vent stack
6 Invert
7 450mm minimum up to three storeys
8 Minimum internal diameter 19mm (fall at least 45mm per meter)

Drain requirements *Figure 9.5.1*

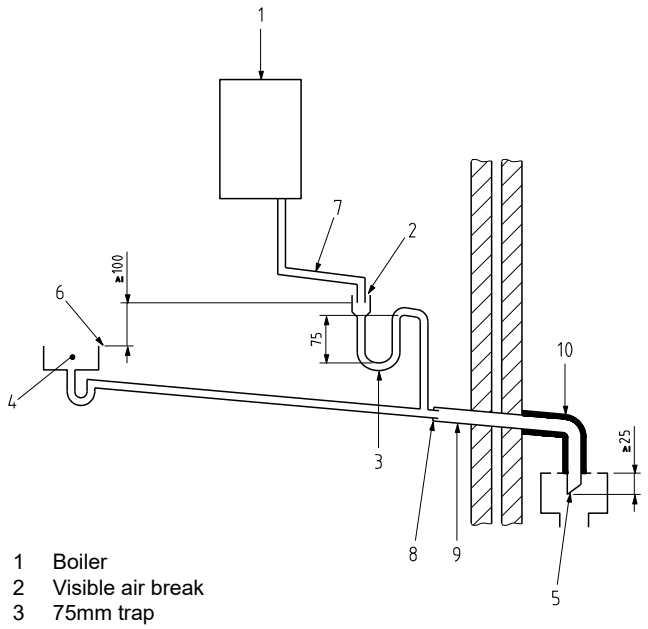

1 Boiler
2 Visible air break
3 75mm trap
4 Visible air break and trap is not required because there is a trap with a condensate seal of 180mm incorporated into the boiler (minimum requirement is 75mm). In this case the 100mm is measured to the trap in the boiler.
5 Sink, basin, bath or shower
6 Open end of condensate drainage pipe direct into gully 25mm min below grating but above water level; end cut at 45°
7 Sink lip
8 Minimum internal diameter 19mm (fall at least 45mm per meter)
9 Pipe size transition
10 Minimum internal diameter 30mm
11 Water/weather proof insulation

Drain requirements *Figure 9.5.2 (a)*

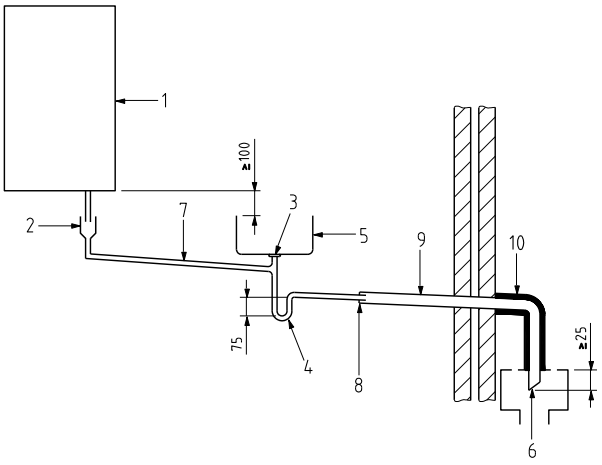

1 Boiler
2 Visible air break at plug-hole
3 75 mm sink, basin, bath or shower waste trap
4 Sink, basin, bath or shower with integral overflow
5 Open end of condensate drainage pipe direct into gully 25mm min below grating but above water level; end cut at 45°
6 Minimum internal diameter 19mm (fall at least 45mm per meter)
7 Pipe size transition
8 Minimum internal diameter 30mm
9 Water/weather proof insulation

Drain requirements *Figure 9.5.2 (b)*

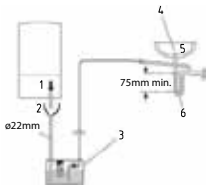

1 Condensate discharge from boiler
2 Condensate pump
3 Visible air break at plug hole
4 Sink or basin with integrated overflow
5 75mm sink waste trap

Drain requirements *Figure 9.5.3*

External pipework

The use of an externally-run condensate drainage pipe, terminating at a suitable foul water discharge point or purpose-designed soakaway, may be also be considered; however if this termination method is chosen then the following measures should be adopted

- The pipe should be run internally as far as possible before going externally and the pipe diameter should be increased to a minimum of 30mm ID (typically 32mm OD) before it passes through the wall.
- The external run should be kept as short as possible, taking the most direct and “most vertical” route possible to the discharge point, with no horizontal sections in which condensate might collect. Do not exceed 3 metres outside the dwelling.
- The external pipe should be insulated using suitable waterproof and weatherproof insulation (“Class O” pipe insulation is suitable for this purpose) .
- The use of fittings, elbows etc should be kept to a minimum and any internal “burrs” on cut pipework should be removed so that the internal pipe section is as smooth as possible.

The customer/householder should be advised that even with the above measures this type of installation could freeze, and that if this were to occur then boiler shutdown could result, requiring remedial action - possibly involving a chargeable engineer call-out.

Where there are likely to be extremes of temperature or wind-chill, the use of a proprietary trace-heating system for external condensate drainage pipework, incorporating an external frost thermostat, should therefore be considered. If such a system is used then the installation instructions of the trace heating manufacturer and any specific recommendations regarding pipe diameter, insulation, etc. should be followed. All other relevant guidance on condensate drainage pipe installation should also be followed.

Other cold weather protection methods approved or endorsed by boiler manufacturers and/or service organisations may be adopted if these are considered suitable by the parties involved.

If an external soil/vent stack is used as the external termination then the connection method shown in Figure 9.5.4 should be used, together with the measures on insulation etc. as described above and shown in the diagram.
When a rain water downpipe is used as the termination (NB only permissible if this downpipe passes to a combined foul and rainwater drainage system) an air break must be installed between the condensate drainage pipe and the downpipe to avoid reverse flow of rainwater into the boiler should the downpipe itself become flooded or frozen. Figure 9.5.5 shows a suitable connection method.

Where the condensate drainage pipe is terminated over an open foul drain or gully, the pipe should terminate below the grating level, but above water level, in order to minimise “wind chill” at the open end. Pipe drainage will be improved if the end is cut at 45° as opposed to a straight cut. The use of a drain cover (such as those used to prevent blockage by leaves) may offer further protection from wind chill. Figure 9.5.6 shows a suitable connection method.

Where the condensate drain pipe terminates in a purpose-designed soakaway (see BS 6798:2014 or boiler installation manual for soakaway design requirements) any above-ground section of condensate drainage pipe should be run and insulated as described above. Figure 9.5.7 shows a suitable connection method.

Unheated internal areas:

Internal condensate drainage pipes run in unheated areas such as lofts, basements and garages should be treated as external pipe.

Draining of the condensation water to the external rain guttering is not permitted in view of the danger of freezing.

Before putting the boiler into operation fill the siphon with 150 ml of water.

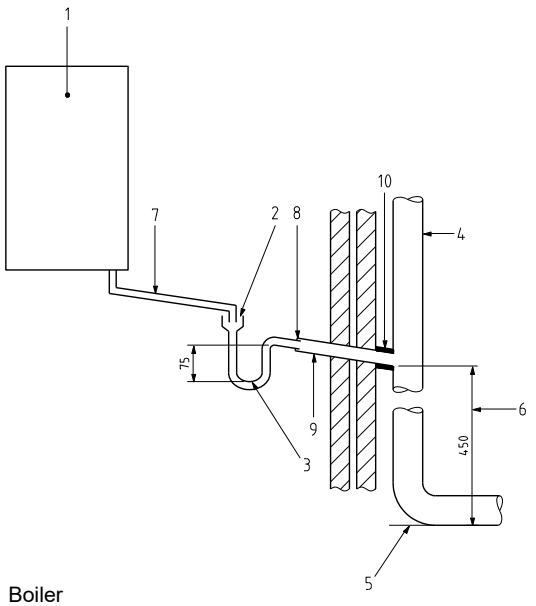

1 Boiler
2 Visible air break
3 75mm trap
4 Visible air break and trap is not required because there is a trap with a condensate seal of 180mm incorporated into the boiler (minimum requirement is 75mm)
5 Soil and vent stack
6 Invert
7 450mm minimum up to three storeys
8 Minimum internal diameter 19mm (fall at least 45mm per meter)
9 Pipe size transition
10 Minimum internal diameter 30mm
11 Water/weather proof insulation

Drain requirements *Figure 9.5.4*

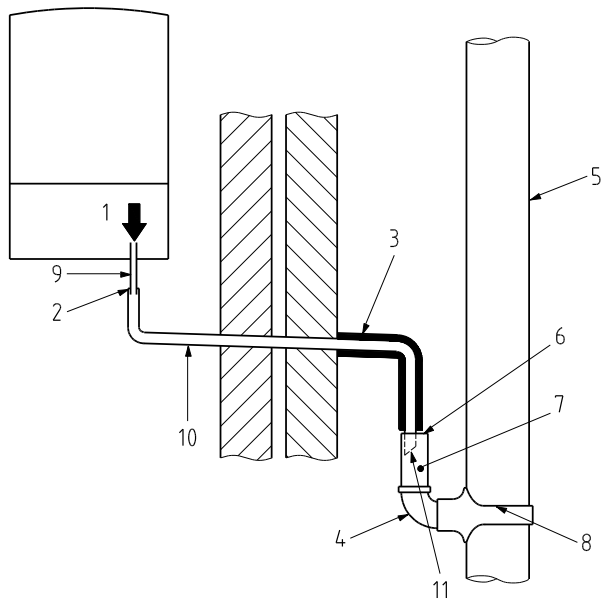

1 Condensate discharge pipe from boiler
2 Pipe size transition point
3 Water/weather proof insulation
4 43mm 90° male/female bend
5 External rain water pipe into foul water
6 External air break
7 Air gap
8 68 mm ø PVCu strap-on fitting
9 Minimum internal diameter 19mm
10 Minimum internal diameter 30mm
11 End cut at 45°

Drain requirements *Figure 9.5.5*

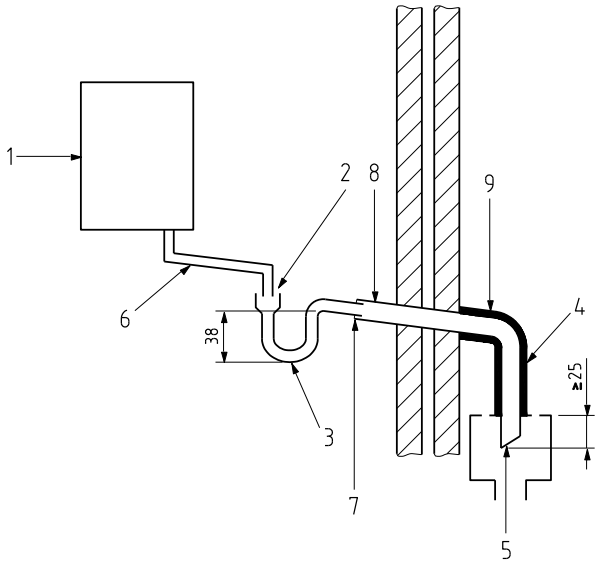

1 Boiler
2 Visible air break
3 38mm minimum trap
4 Visible air break and trap is not required because there is a trap with a condensate seal of 180mm incorporated into the boiler (minimum requirement is 38mm)
5 External length of pipe 3m maximum
6 Open end of condensate drainage pipe direct into gully 25mm min below grating but above water level; end cut at 45°
7 Minimum internal diameter 19mm (fall at least 45mm per meter)
8 Pipe size transition point
9 Minimum internal diameter 30mm
10 Water/weather proof insulation

Drain requirements *Figure 9.5.6*

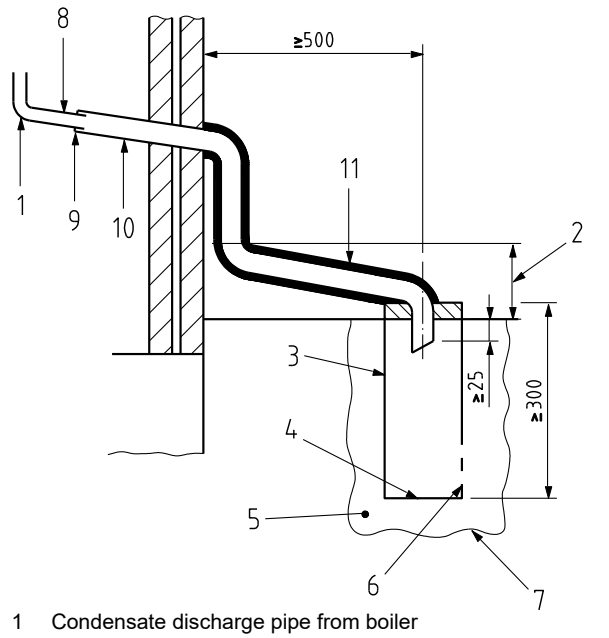

1 Condensate discharge pipe from boiler
2 Ground (this section of the condensate drainage pipe may be run either above or below ground level); End cut at 45°
3 Diameter 100mm minimum plastic tube
4 Bottom of tube sealed
5 Limestone chippings
6 Two rows of three 12mm holes at 25mm centres, 50mm from bottom of tube and facing away from house
7 Hole depth 400mm minimum by 300mm diameter
8 Minimum internal diameter 19mm (fall at least 45mm per meter)
9 Pipe size transition point
10 Minimum internal diameter 30mm
11 Water/weather proof insulation

Drain requirements *Figure 9.5.7*

9.6 Flue gas exhaust system

The flue gas exhaust system and air supply system consists of:
- Flue gas pipe;
- Air supply pipe;
- Roof or wall terminal.

The flue gas exhaust system and air supply system must comply with:

The flue gas outlet and air supply installation must comply with the current regulation requirements in accordance with BS:5440 Part 1 and 2.

The ATAG iR boiler as described in this manual is NOT suitable for a combined flue system.

The appliance concentric connection diameter is 60/100 mm, to which the flue gas outlet and air supply system can be fitted, with or without elbow pieces. The maximum permissible pipe length is set out in Table 9.6.2.a.

For further information about the available components of the flue gas and air supply system we recommend you consult the Flue system literature. Combinations with other brands or systems are, without written permission from ATAG Heating, not permitted.

The ATAG flue gas system is meant, and designed, solely for the use on ATAG central heating boilers adjusted to Nat gas or LPG. For this purpose the CE Certificate has been supplemented under the Gastec nr: 0063CQ3634 The maximum flue gas temperatures are below 70°C (full load 80/60°C).

The proper operation may be adversely influenced by changes of or adjustments to the correct set up. Possible warranty claims will not be honoured if incorrect changes result in non compliance with the installation manual or local rules and regulations.

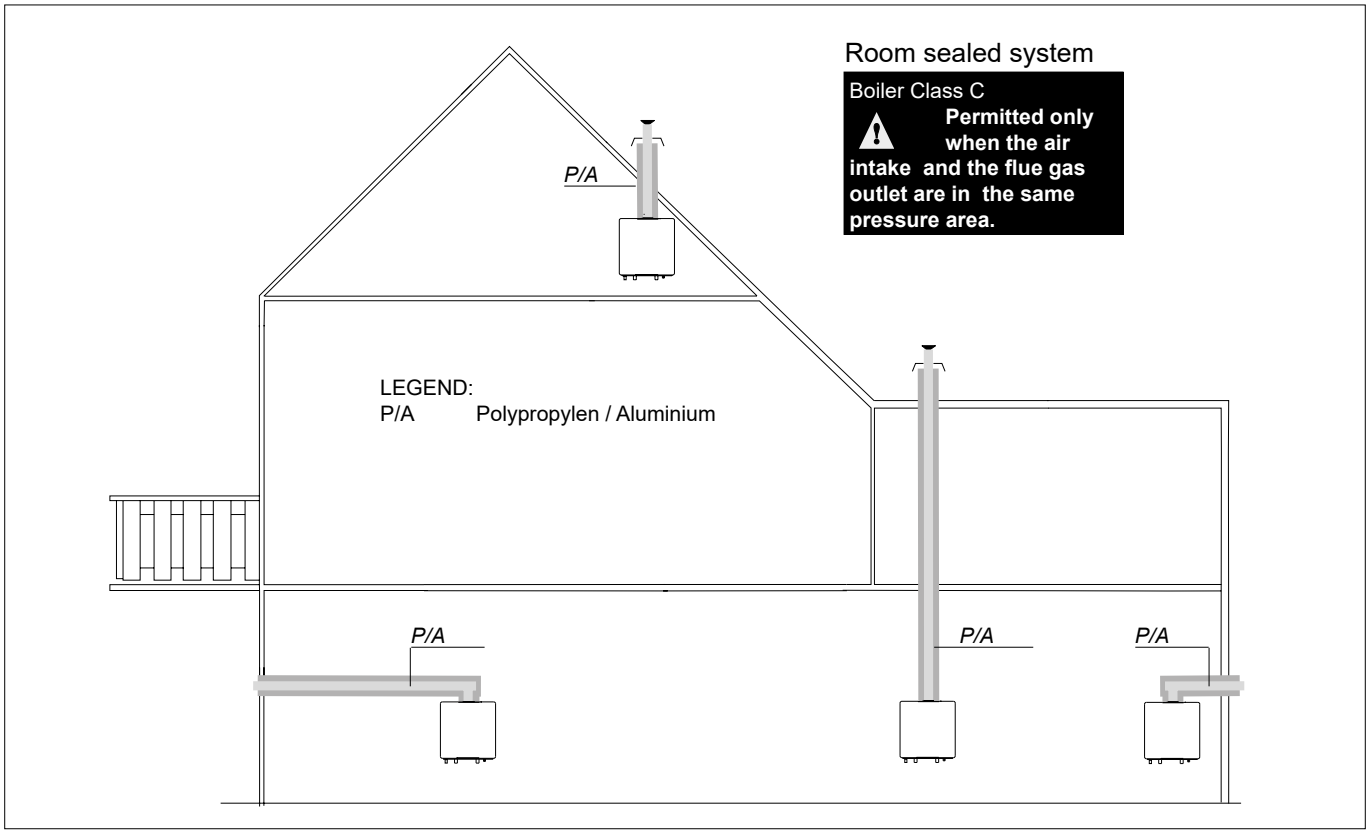

Room sealed system *Figure* 9.6.a

9.6.1 Flue terminal locations

The terminal should be located where dispersal of combustion products is not unimpeded and with due regard for the damage or discolouration that might occur to parts of the building in the vicinity (see fig 9.6.1.c).

In certain weather conditions condensation may also accumulate on the outside of the air inlet pipe. Such conditions must be considered and where necessary insulation of the inlet pipe may be required.
In cold and/or humid weather water vapour may condense on leaving the flue terminal. The effect of such 'plumeing' must be considered.

The terminal must not be located in a place where it is likely to cause a nuisance, where the terminal is less than 2m (6.6ft) above a pavement or platform to which people have access (including) any balcony or flat roof. The terminal must be protected by a guard of durable material.

⚠ **Where a terminal is fitted below a window which is hinged at the top, and where the hinge axis is horizontal, and the window opens outwards, the terminal shall be 1m below the bottom of the window opening.**

⚠ **The flue must be terminated in a place not likely to cause a nuisance.**

For horizontal flue terminal direct to the rear or side through the wall (only 1 bend and 1 wall terminal) the terminal should be placed horizontal. The flue pipe inside the terminal is fitted in a 3 degrees angle to ensure the condensation water can run back to the boiler. See figure 9.6.1.a.

For longer horizontal sections, the outlet system should always be fitted on an incline (52 mm/m = 3°) sloping down towards the boiler so that no condensation water is able to accumulate in the outlet system. The chances of icicles forming on the outlet is minimised by causing the condensation water to run back towards the boiler. See figure 9.6.1.b.

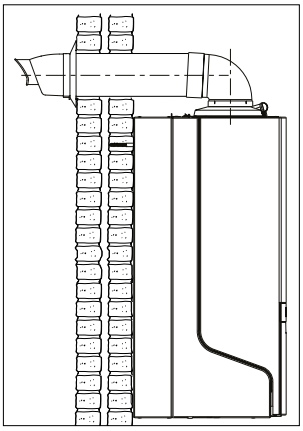

Figure 9.6.1.a

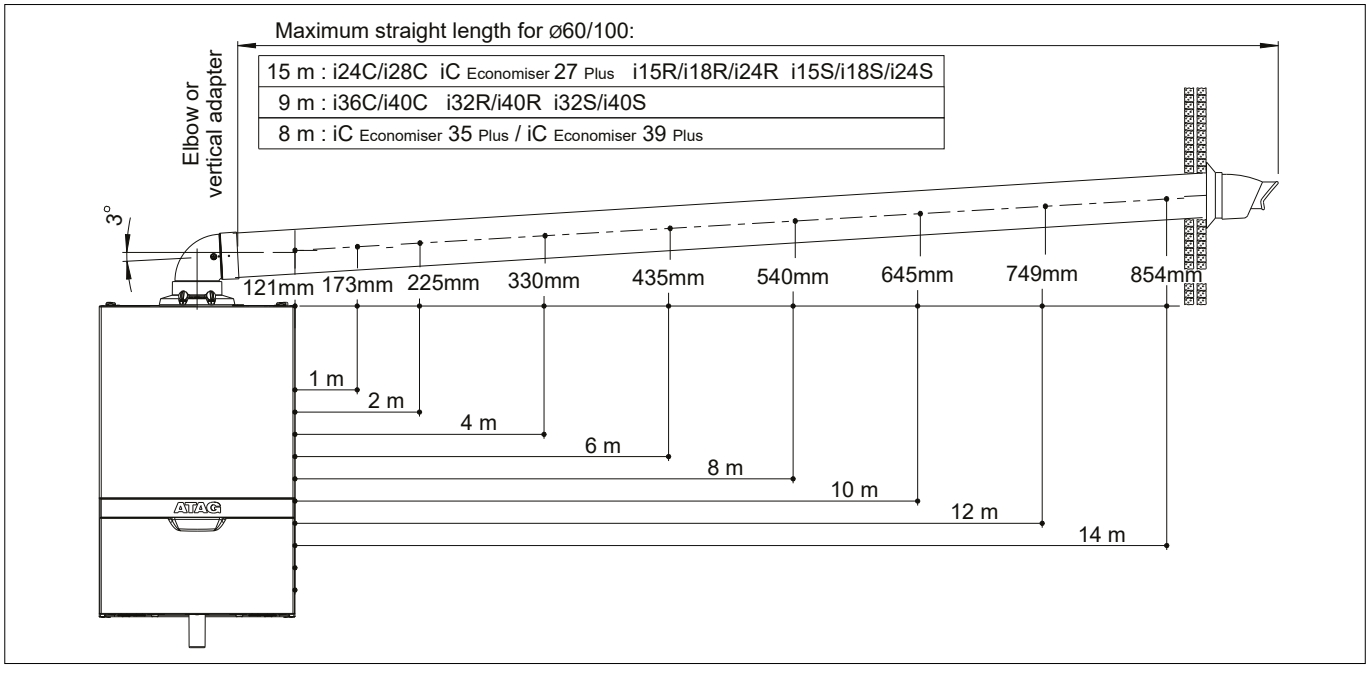

Figure 9.6.1.b

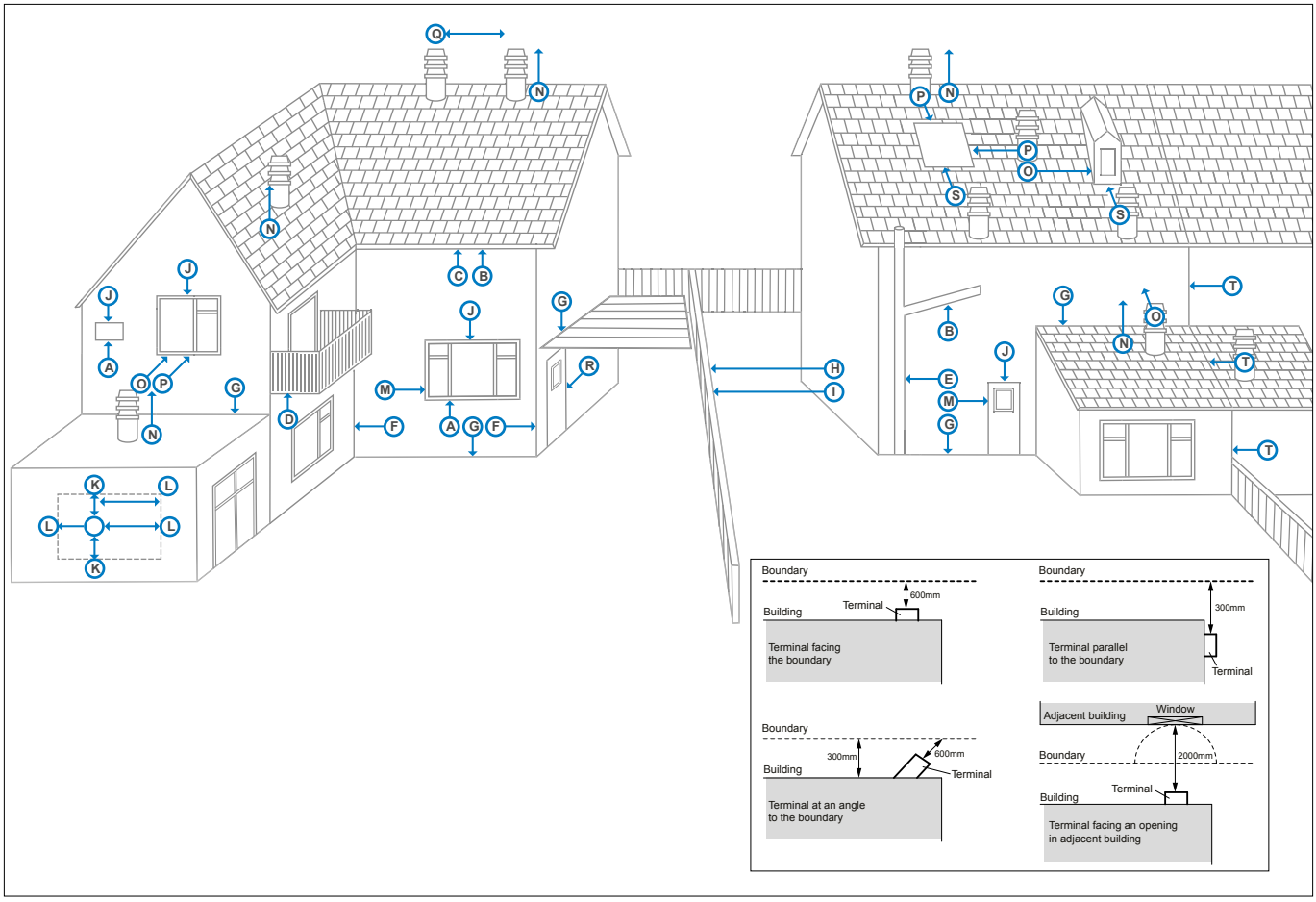

Figure 9.6.1.c

	Terminal position	Min. distance (mm)
A	Directly below an opening, air brick, windows, etc.	300 (See Note 1)
B	Below gutters, soil pipes or drain pipes	75 (See Note 3)
C	Below eaves	200 (See Note 3)
D	Below balconies	200 (See Note 3)
E	From a vertical drain pipe or soil pipe	150 (See Note 3)
F	From an internal or external corner	300 (See Note 2)
G	Above ground, roof or balcony level	300
H	From a surface or boundary facing the terminal	600 (See Note 4)
I	From a terminal facing the terminal	1200
J	Above an opening, air brick, window etc.	300 (See Note 1)
K	Vertically from a terminal on the same wall	1500
L	Horizontally from a terminal on the same wall	300
M	Horizontally from an opening, air brick, window etc.	300 (See Note 1)
N	Minimum protrusion through a roof	300
O	From a vertical obstruction	300
P	From an openable window	600
Q	From an adjacent vertical terminal	600
R	From an opening in the car port (e.g. door, window) into the dwelling	1200
S	Below a roof window	2000
T	Terminal parallel to a boundary	300

Notes:

1. In addition, the terminal should not be nearer than 150mm to the framework of an opening into the building, i.e. a window surround or door surround.
2. This clearance may be reduced to 25mm without effecting the performance of the boiler. However, to ensure the condensate plume does not affect adjacent surfaces a clearance of 300mm is preferable.
3. These clearances may be reduced to 25mm without effecting the performance of the boiler. However, to ensure the condensate plume does not affect adjacent surfaces the terminal can be extended beyond gutters, pipes, eaves, balconies etc.
4. To reduce the possibility of nuisance to neighbouring buildings etc. it is recommended the terminal should not be less than 2500mm from car parking spaces, building boundary walls, fences etc.
5. A terminal must not be sited under a car port roof.
6. In certain weather conditions the terminal will emit a plume of steam. If possible avoid positioning the terminal where this may cause a nuisance, i.e. positions A, D, G, H, J or M.
7. The flue terminal must be exposed to the external air and the position must allow the free passage of air across it at all times.
8. A terminal must not be sited below 2m where people have access to, such as public footpaths, access routes, patios etc. However, If the terminal is fitted less than 2m above a surface where there is no public access, the terminal must be protected by a terminal guard.

The appliance produces a white wisp of condensate (plumeing). This wisp of condensation is harmless, but can be unattractive, particularly in the case of outlets in outside walls.
For wall terminals a plume management kit is available as an option (see fig. 9.6.1.d).

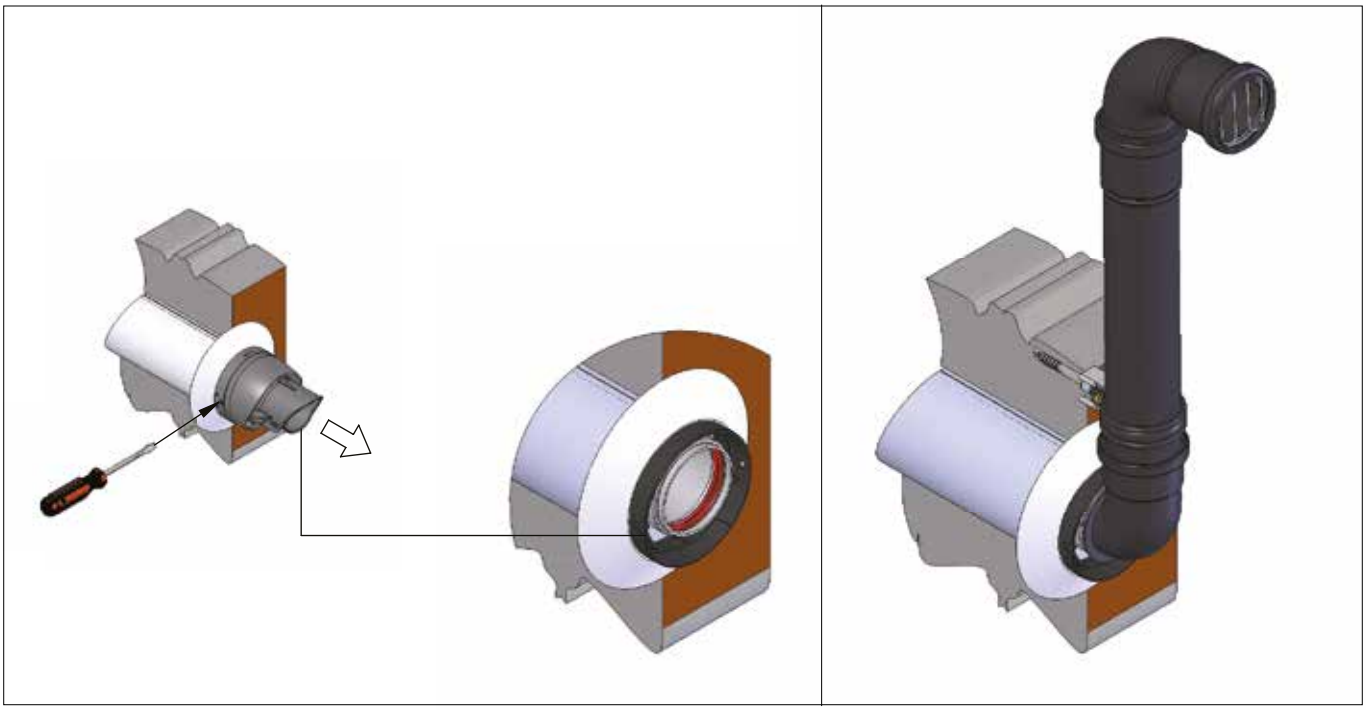

Plume management kit

Figure 9.6.1.d

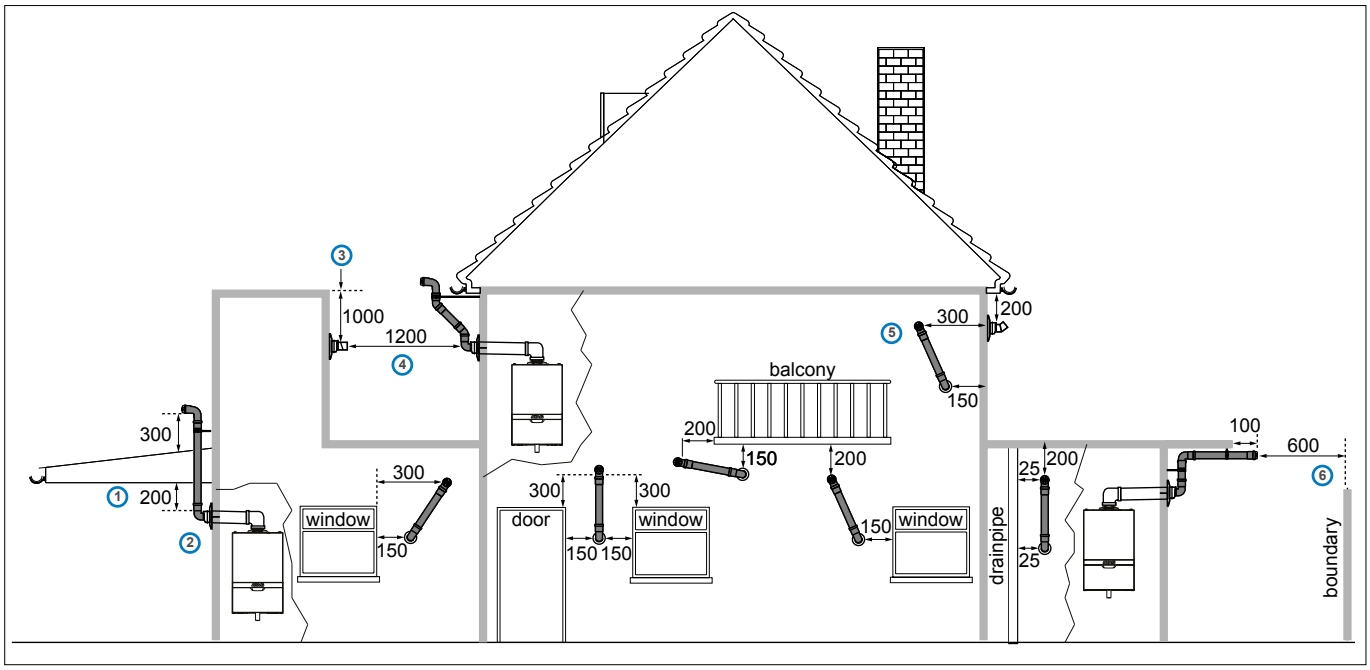

Figure 9.6.1.e

	Terminal position Plume Management Kit (mm)
1	Clearance no less than 200 mm from the lowest point of the balcony or overhang.
2	1,200 mm from an opening in a car port on the same wall i.e. door or window leading into dwelling.
3	The flue cannot be lower than 1,000 mm from the top of the light well due to the build up of combustion products.
4	1,200 mm between air intake and facing terminal.
5	Internal/external corners. The air intake clearance can be reduced to 150 mm providing the flue exhaust outlet has a 300 mm clearance.
6	600 mm distance to a boundary or surface facing a boundary, unless it will cause a nuisance. BS 5440: Part 1 recommends that care is taken when siting terminals in relation to boundaries.

Notes:
1. See also Notes on previous page.
2. Plume kits running horizontally must have a 10° fall back to the boiler for proper disposal of condensate.
3. For details on specific lengths see relevant chapter Dimensioning of the flue gas and air intake duct.
4. A terminal must not be sited under a car port roof.

9.6.2 Dimensioning of the flue gas and air intake duct

The total length of the run of the flue is determined by the flue diameter, including for the connection pipe, elbows fittings and terminal covers etc..
An incorrect dimensioned flue system can lead to disorders. Look at table 9.6.2.a for the choice of the boiler and the corresponding maximum equivalent flue length.

Explanation table 9.6.2.a:

Concentric flue gas system:
maximum noted length L = distance between boiler (from elbow or vertical adapter) and the end of terminal

When using bends the noted value behind every bend should be deducted from the maximum straight length.

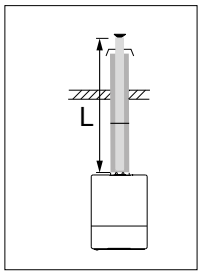

Example:
An i24R with a concentric flue gas system ø60/100mm has according to the table a maximum flue straight length of 15m In the system that is going to be put in there are 2 x 45° bends, so the maximum flue gas length is 15 – (2 x -1.3) = 12.4m.

Dimensions flue gas system and air supply system

Concentric flue system ø60/100 (Horizontal & Vertical)						
Type		**i15R**	**i18R**	**i24R**	**i32R**	**i40R**
Maximum equivalent length (L)	m		15		9	
45° bend resistance length	m		-1.3		-1.3	
87° bend resistance length	m		-1.9		-1.9	
Concentric flue system ø80/125 (Horizontal & Vertical)						
Type		**i15R**	**i18R**	**i24R**	**i32R**	**i40R**
Maximum equivalent length (L)	m		50		45	
45° bend resistance length	m		-1.9		-1.9	
87° bend resistance length	m		-3.0		-3.0	

Tabel 9.6.2.a

Flue dimensions

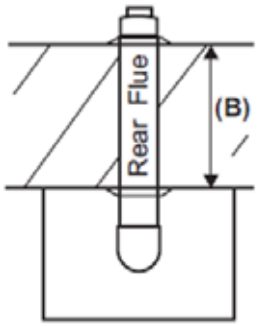

Rear Flue	B (mm)	
	Min	Max
Telescopic flue (FA100105)	280	430

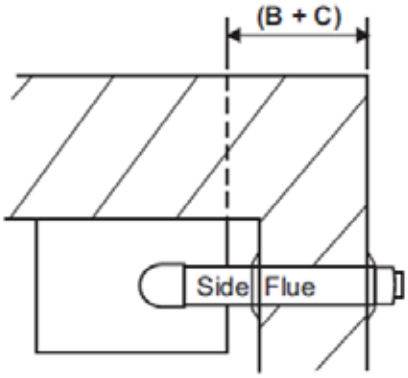

Side Flue	B + C (mm)	
	Min	Max
Telescopic flue (FA100105)	285	435

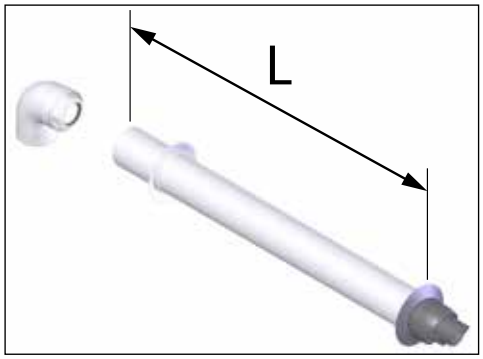

Figure 9.6.2.b

Rear Flue
L = wall thickness (B) + 150mm

Side Flue
L = wall thickness (B) + distance between boiler and wall (C) + 150mm

If the length L is more than 580mm rear flue or 585mm side flue, then a Horizontal flue fixed length 1000mm (60/100mm) with elbow (FA100205) will need to be used instead, up to 810mm.

Fitting the flue

Note: If it is required to cut an extension, **DO NOT** cut the end of the inner duct that incorporates the seal joint.
Ensure the inner duct end without the seal joint is cut so that it is flush with the outer duct.
Ensure that all cuts are square and free from burrs.
Once assembled with the components pushed home, the flue is fully sealed.

1. Adjust the telescopic flue and secure with sealing tape supplied or cut the fixed length terminal flue to the required length.
2. Fit the flue to the extensions (if required) by locating the inner duct into the seal joint and push fully home the inner and outer duct.
3. When connecting the horizontal flue terminal length ensure the terminal end outlet is at the uppermost part of the flue.
4. Pass the terminal flue assembly through the wall.
5. Fit the bend to the boiler turret.
6. If the inside sealing collar (white) is being used, then it will need to be fitted before assembling the flue and making good the inside wall.
7. Pull the flue assembly towards the bend, locating the inner duct into the seal joint on the bend and secure the flue assembly to the bend by pushing fully home (Outer flue duct must be seen through the small inspection hole to confirm fully home).
8. Make good the outside wall and fit the outside sealing collar onto the location provided immediately behind the flue terminal grille.

When mounting the flue gas system, pay attention to the flow direction (See figure 9.6.2.b). It is not permitted to mount a system upside down and will lead to complaints.

Use the special grease (supplied in the accessory bag with the boiler) to simplify the fitting.

The ATAG flue system used is a push fit flue system, which **does not** require screws to be fitted at each flue joint.

The flue system must be adequately supported at regular intervals between brackets of no more than 1.0 metres for horizontal sections and no more than 2.0 metres for vertical sections.

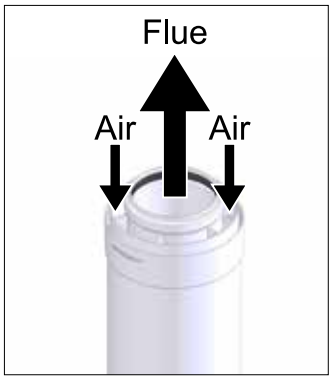

Flow direction *Figure 9.6.2.b*

9.7 Fitting the boiler onto the boiler frame

After the pipe work of gas, heating installation installation has been fitted to the boiler frame, the boiler can be placed on the boilerframe.
Before hanging the boiler to the boiler frame remove first the cover of the boiler first. The cover is also the air cabinet and is attached to the boiler case with 2 fasteners (A and B) (see figure 8.a).

⚠ **Note that there is an earth cable (when present) to disconnect when removing the cover from the boiler. Free space for removing the connector is 400mm. Remember to connect this earth cable (when present) when replacing the cover.**

⚠ **Always refit and turn the 2 screws tight in the fasteners A and B after replacing the cover.**

Remove furthermore the 4 plastic caps from the boiler connections.

⚠ **When removing the plastic sealing caps from the pipes, contaminated testing water may be released.**

⚠ **Lift the boiler only by the boilers case.**

Lifting and carrying precautions:
- Lift only a manageable weight, or ask for help.
- When lifting the boiler, bend the knees, and keep the back straight and feet apart.
- Do not lift and twist at the same time.
- Lift and carry the boiler close to the body.
- Wear protective clothing and gloves to protect from any sharp edges.

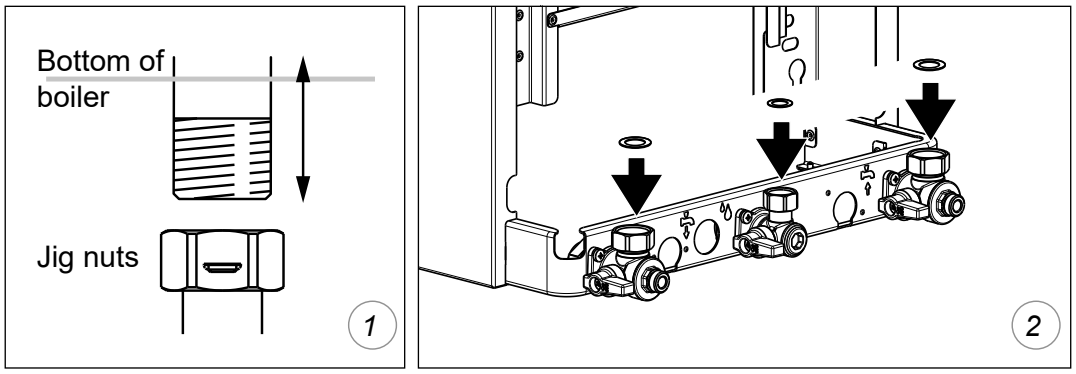

Figure 9.7.a

1. Press all connection underneath the boiler upwards
2. Put on each valve and the elbow fitting a fibre washer (supplied)

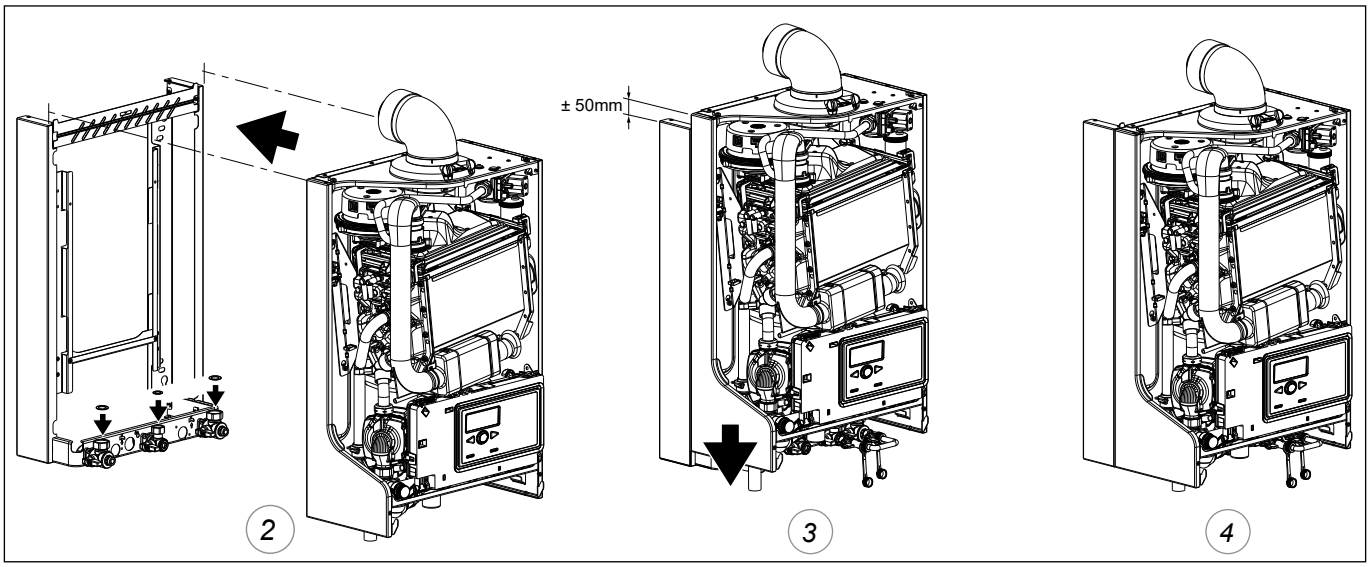

Figure 9.7.b

3 and 4. Take the boiler and hang it from approx. 50mm higher than the boiler frame vertical downwards on the boiler frame so the fittings will be axial approached.

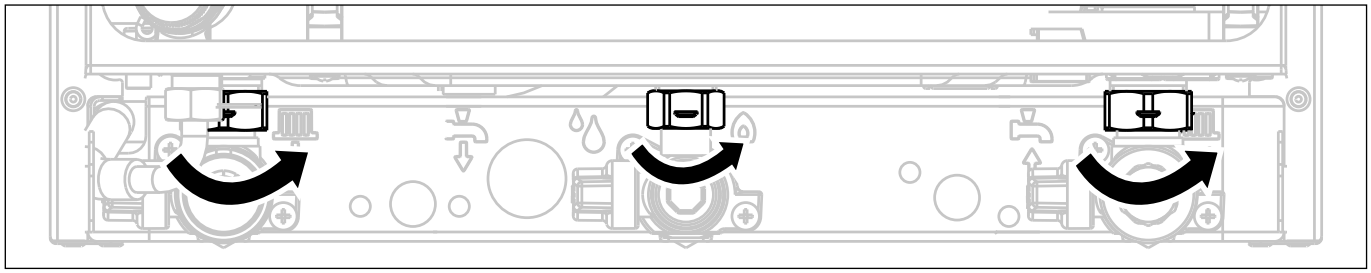

Figure 9.7.c

Fitting the nuts:
Turn each nut of the fittings on the boiler connections by hand and tighten each nut with a wrench.

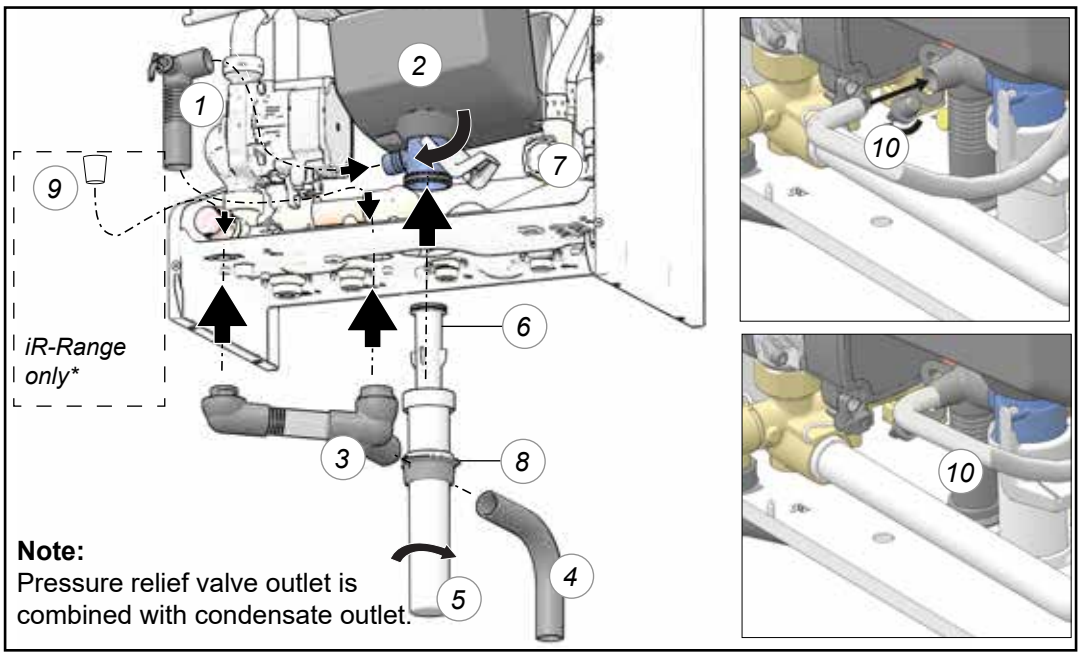

Figure 9.7.d

Fitting siphon:
- Press and turn the assembly (3), with the elbow first, in the corresponding holes in the bottom plate of the boiler.
- Press the black flexible pipe (1) from inside the boiler in the rubber T-piece (3).
- Press the black rubber elbow with flexible drain pipe (1) on the condensate tray (2)
- Lead the long black flexible pipe (4) through the free hole of the boiler frame and press it in the T-piece (3)
- Lead the other end of the flexible pipe outside the boiler to the drain as installed according to the installation and service manual.
- Fill the siphon cup (5) with **150 ml water**, insert the siphon pipe (6) in the siphon cup (do not press) and insert this through the hole in the bottom plate of the boiler into the condensate tray (2) of the heat exchanger. Secure the siphon cup with the securing clip (7) by turning it clockwise (click!).
- Press the sealing ring (8) around the siphon cup and press/turn it in the bottom plate of the boiler.

* **iR-Range only:** Press the black rubber plug (9) from inside the boiler in the rubber elbow of assembly (3).

- Open the plug of the elbow of assembly (1) and push the flexible transparent tube from the automatic deaerator in the opening (10). **NOTE: The plug remains closed when the flexible transparent tube from the automatic deaerator is <u>not</u> connected.**

Before putting the boiler into operation fill the siphon with 150 ml of water.

10 Electrical connection

The appliance complies with the actual directives. The installation must continue to comply with:
- A 230V -50Hz mains electrical supply is required fused externally at 3A.
- A deviation on the grid of 230V (+10% or -15%) and 50Hz
- the national rules for electrical installations.

The appliance must be connected to an earthed socket. This must be visible and within reach.

The following general stipulations also apply:
- No changes may be made to the wiring of the appliance;
- All connections should be designed in accordance with the enclosed regulations;

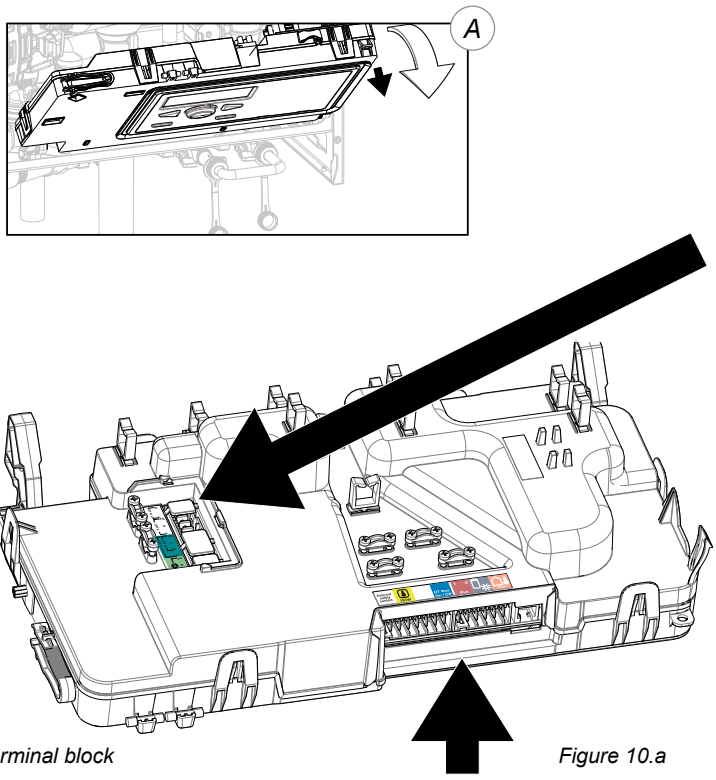

terminal block

Figure 10.a

230V control terminal block iR-Range

N:	Neutral	**230V out**
L:	Live	
E:	Earth	
N:	Neutral	**230V in LNE**
L:	Live	
E:	Earth	
L:	Live	**230V live output**
N:	Neutral	
SwL:	Switched live	**230V live input only!**
E:	Earth pump	
N:	Neutral pump	**230V live output to pump**
L:	Live pump	

DO NOT CONNECT 230VOLT

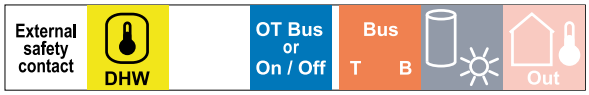

Terminal block iR-Range

- ATAG Outdoor sensor 1kOhm*
- n.a. = not applicable
- ATAG Zone connection
- OpenTherm or ON/OFF thermostat
- n.a. = not applicable
- DHW sensor
- External safety contact

* Mounting on north – north/east facade of the house. Prevent outside influences such as snow, ventilation air or chimney heat.

10.1 External safety contact (white)

This connection comes with a loop of wire. This loop enables the boiler to work. Removing the loop will stop the boiler from firing up.

The connection can be used to connect a condensate pump safety overflow switch, where this will stop the boiler from firing if the condensate pump cannot get rid of the condensate water and the safety overflow switch is triggered

10.2 DHW sensor connection (yellow)

N/A not applicable.

10.3 OpenTherm BUS & ON / OFF connection (blue)

This PCB will detect if an OpenTherm or an On / Off device is connected to the blue plug on the terminal block.
An OpenTherm compatible device as well as a volt free on / off thermostat or programmable room thermostat can be used to switch on or off the heat demand to the boiler.

10.4 ATAG Zone connection (red)

The ATAG One zone smart room thermostat is the primary candidate for use of the ATAG zone eBus connection. The smart room thermostat can also be substituted by another ATAG zone compatible room controller, this eBus enables the boiler to modulate set point temperatures for optimal efficiency.
On top of the thermostats, the connection is used for other ATAG zone compatible devices such as zone management accessories.

10.5 Solar inlet sensor connection (grey)

N/A not applicable.

10.6 ATAG Outside sensor (rose)

When a weather compensation sensor (supplied with the boiler) is used, the two wires from the outside sensor get wired into the plug supplied on the terminal block in the rose connector position.

10.7 230V Out (230V live output, white)

Not used.

10.8 230V In (230V live input, white)

This is the 230V mains power input to the boiler connection.

10.09 230V Control Block (230V live output, aqua blue)

f a live, neutral or earth wire is required for an external clock/programmer these can be taken from the (L) live, (N) Neutral or (E) earth 230V live output aqua blue connections on the 230v control terminal block.
If an external 230V clock/programmer is used, then a switched live is required from the control(s) to connect to the 230V control aqua blue connector in position (SwL) Switched live to fire up the boiler.

10.10 230V Control Block (SwL Switched live, aqua blue)

If a 230V room thermostat is used, then a switched live is required from the control(s) to connect to the 230V control aqua blue connector in position (SwL) Switched live to fire up the boiler. This could be in series after the clock/ programmer to the room stat, then to SwL on the 230V control aqua blue connector.

10.11 External pump (230V live output, green)

The system pump MUST be wired directly back to the boiler into the (L) live pump, (N) Neutral pump and (E) earth pump 230V live output to pump connections on the 230V control terminal block.
This is so the boiler can control when the pump is operated. This will allow the boiler to run the pump for the pump overrun feature, which will last 60 seconds.

10.12 Electrical diagram

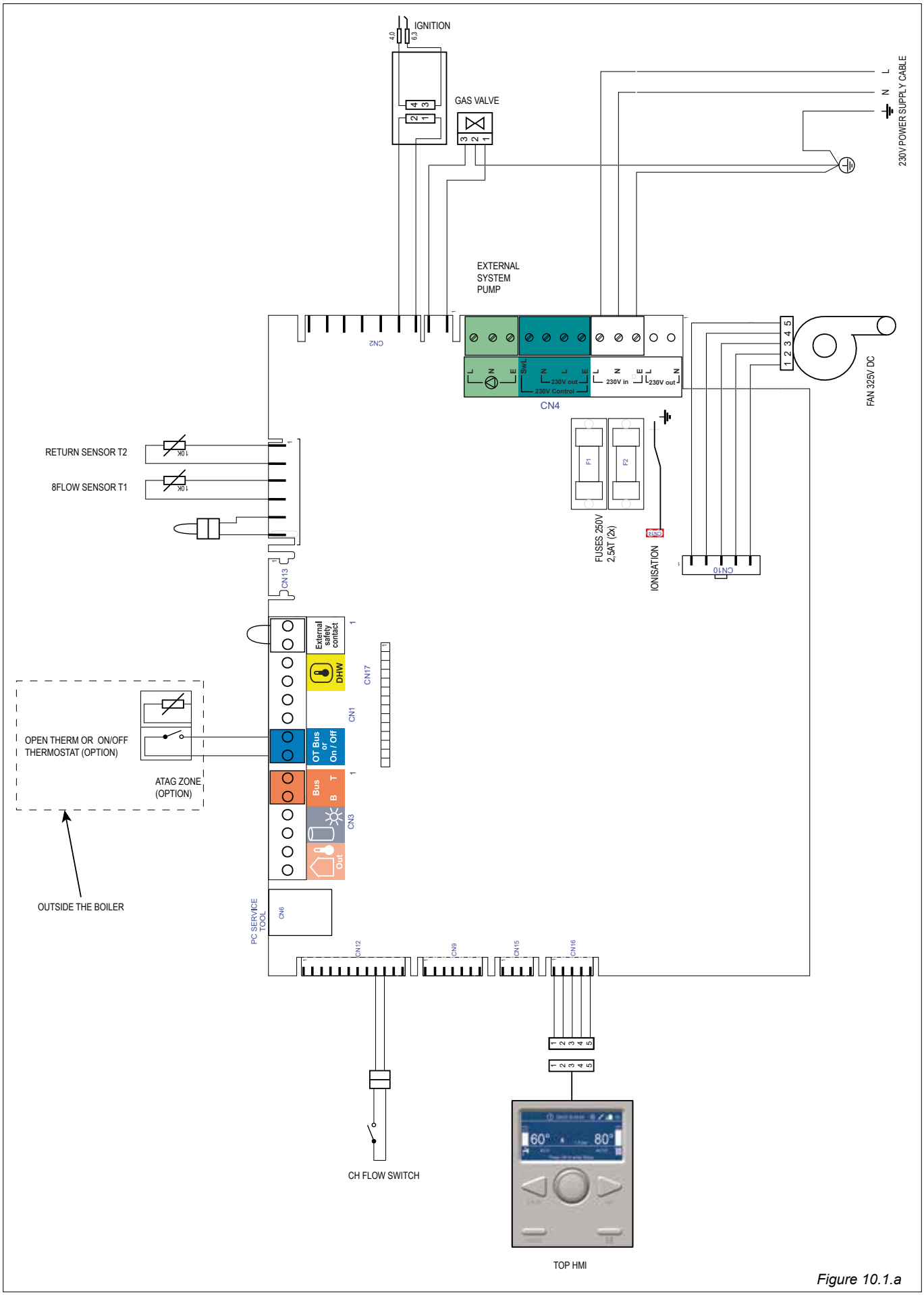

Figure 10.1.a

11 Filling system

The central heating installation needs to be filled with potable water according to the requirements in chapter 9.3 'Water quality'. For filling the CH installation, use the the feed and expansion header tank. Use the following procedure:

1	Ensure all system and boiler drain points are closed;
2	Open all isolation and motorised valves;
3	Turn on the water supply to the system header tank
4	Vent all radiators and pipework;
5	Check system for any visable leaks;

When powering up the boiler (described in chapter 13) an automatic air purge program will run to vent the boiler.

12 Boiler controls

Before the electrical power is switched on, it helps to know the operation of the boiler in advance. On this page the controls are described in short. The next page describes the button functions and the symbols on the screen.

Resistance table sensors ATAG iC-, iS- and iR-series			
Outside sensor T4		Flow sensor T1 Return sensor T2 DHW sensor T3	
NTC1k (25°C)		NTC10k (25°C)	
Temperature [°C]	Resistance [Ohm]	Temperature [°C]	Resistance [Ohm]
-10	4.574	-10	55.047
-9	4.358	0	32.555
-8	4.152	10	19.873
-7	3.958	12	18.069
-6	3.774	14	16.447
-5	3.600	16	14.988
-4	3.435	18	13.674
-3	3.279	20	12.488
-2	3.131	22	11.417
-1	2.990	24	10.449
0	2.857	26	9.573
1	2.730	28	8.779
2	2.610	30	8.059
3	2.496	32	7.406
4	2.387	34	6.811
5	2.284	36	6.271
6	2.186	38	5.779
7	2.093	40	5.330
8	2.004	42	4.921
9	1.920	44	4.547
10	1.840	46	4.205
11	1.763	48	3.892
12	1.690	50	3.605
13	1.621	52	3.343
14	1.555	54	3.102
15	1.492	56	2.880
16	1.433	58	2.677
17	1.375	60	2.490
18	1.320	62	2.318
19	1.268	64	2.159
20	1.218	66	2.013
21	1.170	68	1.878
22	1.125	70	1.753
23	1.081	72	1.638
24	1.040	74	1.531
25	1.000	76	1.433
26	962	78	1.341
27	926	80	1.256
28	892	82	1.178
29	858	84	1.105
30	827	86	1.037
35	687	88	974
40	575	90	915

Resistance table *table 12.a*

The boiler is equipped with self-managing control system. This control system takes over a large part of the manual settings, which simplifies the start-up of the installation considerably.

After filling the installation and switching on the electrical power supply a short start-up program is activated. This shows all digits, boiler type and software version and the automatic air purge program is activated. The automatic air purge program lasts for approx. 7 minutes and stops automatically. Then the boiler will switch on for the enabled program.

CH controls

With a demand from the heating controls, the boiler activates its 1 minute delay period. This is to prevent the heat exchanger from losing its heat too quickly in the event of a hot water demand. Then the pump starts and after 30 seconds the gradient control becomes active.
The starting point of the gradient control is the currently existing flow temperature. A Delta-T control (25K) ensures a stable control according to heat request.
If the flow temperature is below the T-set value of 20°C the boiler will immediately start.
If during a demand from the heating the burner switches off, because the desired flow temperature is exceeded, there will be an anti-cycle time in operation for 5 minutes. This means that the burner switches on again after 5 minutes if there is still a demand from the heating.

The ATAG iR is equipped with boiler sensors of 10kOhm. The resistance value and corresponding temperature are shown in the accompanying table.

Explanation of the Buttons and Control panel

1. **Selector** Wheel — **Turn** the wheel left or right to scroll through available menu options
2. **OK** button — **Press** to select/confirm an item
3. **BACK** button — **Press** to go back one screen
4. **RESET** button — **Press** to reset a fault code
5. **Commissioning** button — **Press** to enter into service mode which allows adjustment of high fire/low fire and CO^2 settings **(Do not use. For service purposes only)**

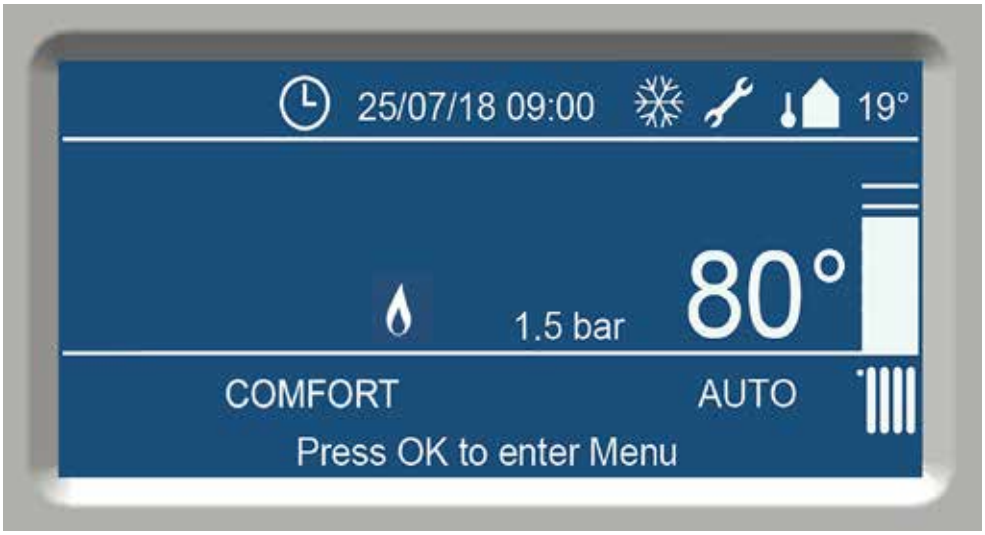

The Control unit has a 'sleep mode' if no key is operated within a certain time. Activation occurs by any key operation.

- Outdoor temperature (if connected)
- Maintenance warning present
- Pump continuous/frost protection
- Burner on

- DHW status symbol. A box around the tap symbol indicates DHW is in operation
- Central heating status symbol. A box around the radiator symbol indicates central heating is in operation
- **ECO** Hot water is not preheated
- **COMFORT** Hot water is pre-heated and kept hot

12.1 Change the Central Heating setpoint temperature

1 From the controller Home screen, press **OK**.

2 Turn the selector wheel to highlight **Complete Menu**.
Press **OK**.

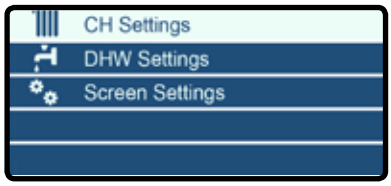

3 **CH Settings** is highlighted.
Press **OK**.

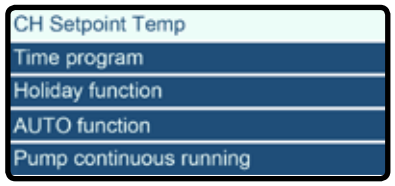

4 Option **CH Setpoint Temp** is highlighted.
Press **OK**.

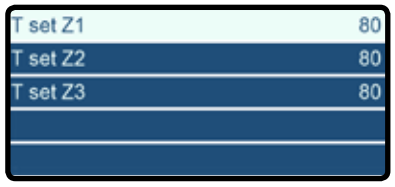

5 Option **T set Z1** is highlighted.
Press **OK**.

Note: T set Z2 and T set Z3 are inactive functions.

7 Turn the selector wheel until the desired temperature appears on the screen.
Press **OK**.
Available temperature settings:
20˚C - 80˚C

12.2 Change the language on the screen

1 From the controller Home screen, press **OK**.

2 Turn the selector wheel to highlight **Complete Menu**.
Press **OK**.

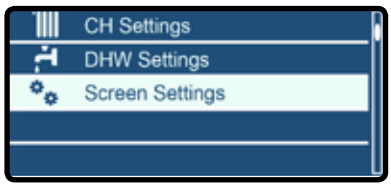

3 Turn the selector wheel to highlight **Screen Settings**.
Press **OK**.

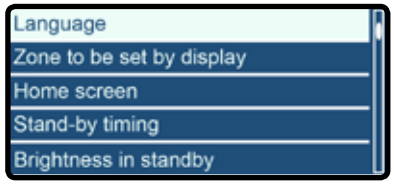

4 Option **Language** is highlighted.
Press **OK**.

5 Turn the selector wheel to highlight the desired language.
Press **OK**.

The language is changed now.

12.3 Change the time and date

1 From the controller Home screen, press **OK**.

2 Turn the selector wheel to highlight **Complete Menu**.
Press **OK**.

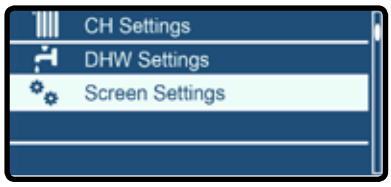

3 Turn the selector wheel to highlight **Screen Settings**.
Press **OK**.

4 Turn the selector wheel to highlight **Time & Date**.
Press **OK**.

5 Turn the selector wheel to highlight the desired field.
Press **OK**.
The relevant field starts to flash.
Turn the selector wheel to to select the correct value.
Press **OK**.
After correctly filled in all fields, Press **Save**.

The message in the screen left appears.

The settings are saved.

12.4 Change Units of Measurement

1 From the controller Home screen, press **OK**.

2 Turn the selector wheel to highlight **Complete Menu**.
Press **OK**.

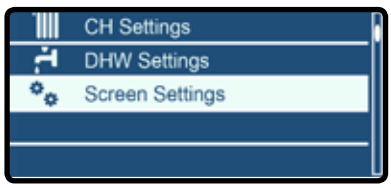

3 Turn the selector wheel to highlight **Screen Settings**.
Press **OK**.

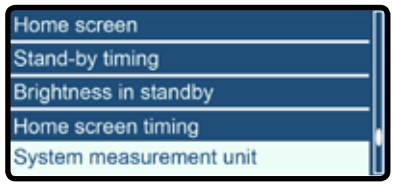

4 Turn the selector wheel to highlight **System measurement unit**.
Press **OK**.

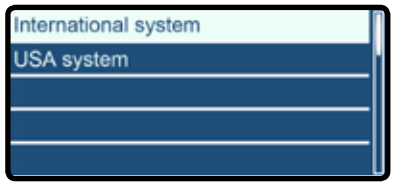

5 Option **International system** is highlighted.
Press **OK**.

The message in the screen left appears.

12.5 Boiler information

To gain access to the Boiler information, proceed as follows:

The Boiler information is accessable through a code.

1 From the controller Home screen, press the **BACK** and **OK** buttons at the same time for 7 seconds.

2 Turn the selector wheel to highlight **007** as the Technical Code.
Press **OK**.

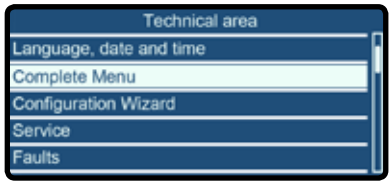

3 Turn the selector wheel to highlight **Complete Menu**.
Press **OK**.
It is now loading the menu.

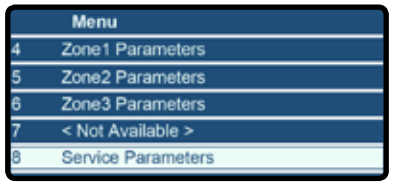

As an example we take the **CH Flow Set T**.

4 Turn the selector wheel to highlight **8 Service Parameters**.
Press **OK.**

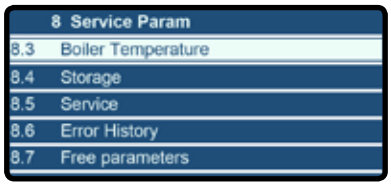

4 Option **8.3 Boiler Temperature** is highlighted.
Press **OK**.

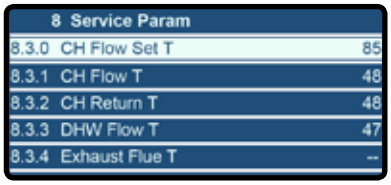

5 Option **8.3.0 CH Flow Set T** is highlighted.
Press **OK**.

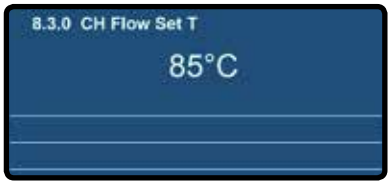

The screen left appears.

A list of the most common Boiler information can be found in the table below

8.2.2	Fan Speed in Rpm
8.2.8	Gas Power in kW
8.2.9	Heating circuit pressure in bar = '--'
8.3.0	CH Flow Set T in °C
8.3.1	CH Flow T in °C
8.3.2	CH Return T in °C
8.3.5	Outdoor T (only if an outside sensor is connected) in °C
8.7.5	Ionization current in µA

12.6 Pump function

By default the boiler is set in such a manner that the pump will switch on in case of a heat request for CH or DHW. Switching on and off is managed entirely by the control system.

Danger of frost
If there is danger of frost damage to the CH installation, it is advisable to let the pump run continuously, proceed as follows:

1 From the controller Home screen, press **OK**.

2 Turn the selector wheel to highlight **Complete Menu**.
Press **OK**.

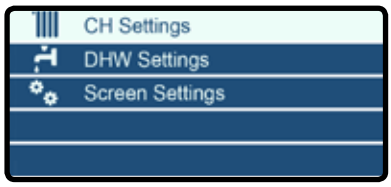

3 **CH Settings** is highlighted.
Press **OK**.

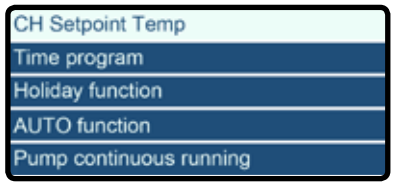

4 Option **CH Setpoint Temp** is highlighted.
Press **OK**.

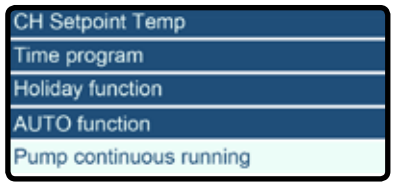

5 Turn the selector wheel to highlight **Pump continuous running**.
Press **OK**.

7 Turn the selector wheel to highlight **Enable**.
Press **OK**.
If the pump is set to continuously this is displayed by ❄ .

Boiler frost protection
If the (T1) flow sensor registers a temperature of 5°C or below in the boiler, the boiler will fire up. The boiler keeps on firing until the temperature reaches 10°C (measured on the flow sensor) and the boiler switches off again.

13 Commissioning the boiler

Make sure before the boiler is put into operation that the boiler and installation have been fully vented. Vent the gas line and open the gas isolation valve to the boiler. The boiler requires no adjustment of the burner pressure and quantity, because it is self-regulatory and has been set in the factory and should not be reset.

1. Turn on the boiler electrical supply;
2. When the boiler starts up for the first time the following screens will be shown:

3. After filling the 7 minute air purge cycle starts;
4. Vent the entire heating installation starting at the lowest point;

The automatic air purge program will take approx. 7 minutes and will be followed by the home screen.

The iR boilers are supplied with a flow switch. If the external pump starts, the flow switch is made, the burner is set free, if the flow switch is not made the boiler will not fire.

Work on the installation and/or boiler should only be carried out by qualified personnel with calibrated equipment.

At the time of commissioning, complete all revelant sections of the Benchmark Checklist located on the inside back pages of the document.

For maintenance of the boiler the cover has to be removed.
Unscrew the 2 locking screws from the fasteners at the top of the boiler, unlock the fasteners and remove the cover in a forward motion. See figure 16.a

Always refit and turn the 2 screws tight in the fasteners A and B.

Changing settings, such as the burner pressure and the amount of air flow, is superfluous. Only in case of a failure or when replacing the gas block, venturi and/or fan, the CO_2 percentage should be checked.

Always check all gas carrying parts for leaks (with a leak detection spray) after (maintenance) work to the boiler.

Close the relevant commissioning valves during the maintenance activities. See figure 15.a.

Draining the boiler
The heating installation must be provided with a fill and drain valve. Use this feature also for draining the boiler.

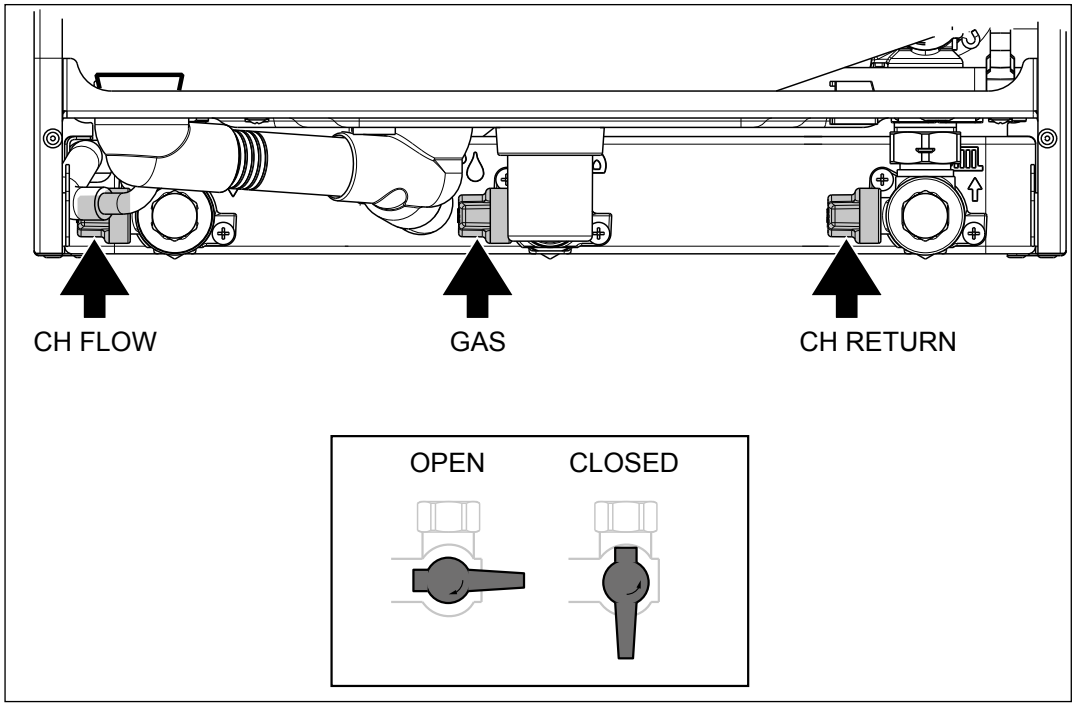

Figure 15.a

13.1 Checking the CO_2

The CO_2 check consists of 2 steps or, if necessary, 3 steps:

Step 1: Check on full load
Step 2: Check on low load
Step 3: Adjustment (if necessary).

Step 1: CO_2 check on full load

The CO_2 setting is preset at the factory on all boilers. A calibrated Flue Gas Analyser must be carried out during commissioning.

- Ensure that the boiler is in operation and that the heat, which it produces, can be discharged.

Set the full load
You can set the full load of the boiler as follows:

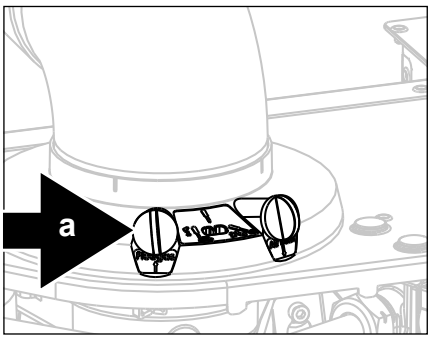

Measuring point CO_2 Figure 15.1.a

- Press the chimney sweep button for 5 seconds;
- Turn the selector wheel until you reach 100%;
- Press OK;
  The boiler will switch to maximum power output of the boiler; the screen shows 100% (heating capacity)
- Calibrate the Flue Gas Analyser, and then insert the flue gas probe of the Flue Gas Analyser into the measuring point of the flue gas pipe “a” (see illustration).
- Wait for one minute and then carry out a combustion analysis.
- Check whether the CO_2 values that are listed below correspond to the measured value.

After this check has been done at full load, the CO_2 value at low load need to be tested (see Step 2 on page 47). If there are any deviations in the result, then these must be corrected (see Step 3 on page 48).

CO_2 check on full load (Step 1)		
Full load	**Natural gas (G20)**	**Propane (G31)***
CO_2	Nominal 9.0%	Nominal 10.3%
	Minimum 8.6%, maximum 9.6%	Minimum 9.9%, maximum 11.0%

Values are valid with closed cover/air box.

*** Only possible if LPG conversion kit is installed!**

Step 2: CO_2 check on low load

Set the low load
The low load of the boiler can be set by you as follows:

-

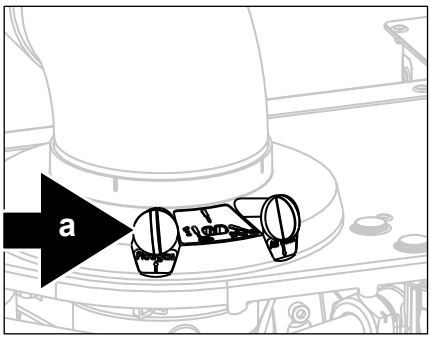

Measuring point CO_2 Figure 15.1.a

- Turn the selector wheel until you reach 0%;
- Press OK;
  The boiler will switch to minimum power output (low load) of the boiler;
  the screen shows 0% (heating capacity).

The CO_2 value at low load must be lower than the CO_2 value at full load. The measuring procedure must be carried out, until a constant value is achieved. Please contact ATAG, if the values should lie outside of the applicable tolerances.

End of measuring:

- Press the back button for 5 seconds to exit chimney sweep mode.

This completes the procedure.

The maximum duration of the commissioning function, without interruption, is 20 minutes.

CO_2 check on low load (Step 2)				
Low load	**Natural gas (G20)**		**Propane (G31)***	
CO_2 Example readings	Full load recorded	Accepted low range	Full load recorded	Accepted low range
	9.6%	9.3% - 7.5%	11.0%	10.9% - 8.9%
	9.5%	9.2% - 7.5%	10.9%	10.8% - 8.9%
	9.4%	9.1% - 7.5%	10.8%	10.7% - 8.9%
	9.3%	9.0% - 7.5%	10.7%	10.6% - 8.9%
	9.2%	8.9% - 7.5%	10.6%	10.5% - 8.9%
	9.1%	8.8% - 7.5%	10.5%	10.4% - 8.9%
	9.0%	8.7% - 7.5%	10.4%	10.3% - 8.9%
	8.9%	8.6% - 7.5%	10.3%	10.2% - 8.9%
	8.8%	8.5% - 7.5%	10.2%	10.1% - 8.9%
	8.7%	8.4% - 7.5%	10.1%	10.0% - 8.9%
	8.6%	8.3% - 7.5%	10.0%	9.9% - 8.9%
			9.9%	9.8% - 8.9%

Values are valid with closed cover/air box.

*** Only possible if LPG conversion kit is installed!**

Step 3: Adjustment on the gas valve

Adjust the gas valve only in case the measured values lies out of range of the values mentioned in the table on previous page.

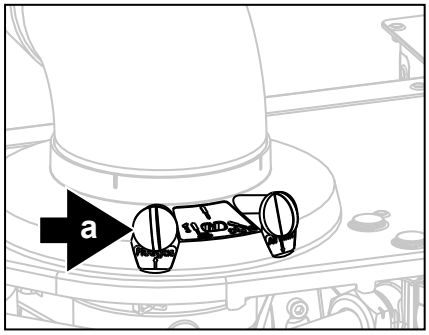

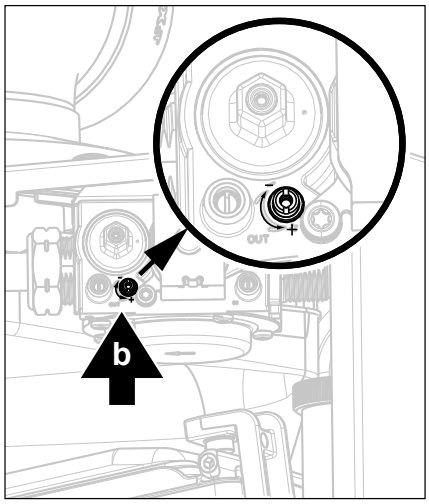

- Open the boiler as described on page 55;
- Set the boiler on full load (see Step 1)
- The CO_2 values are set by using an Allen key (2 mm), or a large flat head screwdriver, on the screw “b”.

  Please observe the following rotating direction:
  - Clockwise means less CO_2
  - Counterclockwise means more CO_2

After this setting has been made, once more test the CO_2 value at full load and low load. See Step 1 and 2.

Legend

a Measuring point for the flue gas probe
b Set screw for CO_2

Adjustment of the gas valve in case the measured values lies out of range of the values on full load (Step 3)		
Full load	**Natural gas (G20)**	**Propane (G31)***
CO_2	9.0%	10.3%

Values are valid with closed cover/air box.

*** Only possible if LPG conversion kit is installed!**

13.2 CO and combustion checks

IMPORTANT PRELIMINARY INFORMATION ON CHECKS

NOTE: The air gas ratio valve is factory set and must not be adjusted during commissioning unless this action is recommended following contact with the manufacturer.

If any such adjustment is recommended and further checking of the boiler is required the installer/service engineer must be competent to carry out this work and to use the flue gas analyser accordingly.

If the boiler requires conversion to operate with a different gas family (e.g. conversion from natural gas to LPG) separate guidance will be provided by the boiler manufacturer

PRIOR TO CO LEVEL AND COMBUSTION RATIO CHECK

The boiler manufacturer's installation instructions should have been followed, gas type verified and gas supply pressure/rate checked as required prior to commissioning.

As part of the installation process, **especially where a flue has been fitted by persons other than the boiler installer**, visually check the integrity of the whole flue system to confirm that all components are correctly assembled, fixed and supported. Check that manufacturer's max. flue lengths have not been exceeded and all guidance has been followed (e.g. Gas Safe Technical Bulletin TB008 where chimney/flues are in voids).

The Flue Gas Analyser should be of the correct type, as specified by BS 7967

Prior to its use, the flue gas analyser should have been maintained and calibrated as specified by the manufacturer. The installer must have the relevant competence for use of the analyser.

Check and zero the analyser IN FRESH AIR as per analyser manufacturer's instructions.
Key:
CO = carbon monoxide **CO_2** = carbon dioxide **O_2** = oxygen **ppm** = parts per million
Combustion ratio = The CO reading measured in ppm divided by the CO_2 reading first converted to ppm
GU(I&U)R = Gas safety (Installation & use) Regulation.

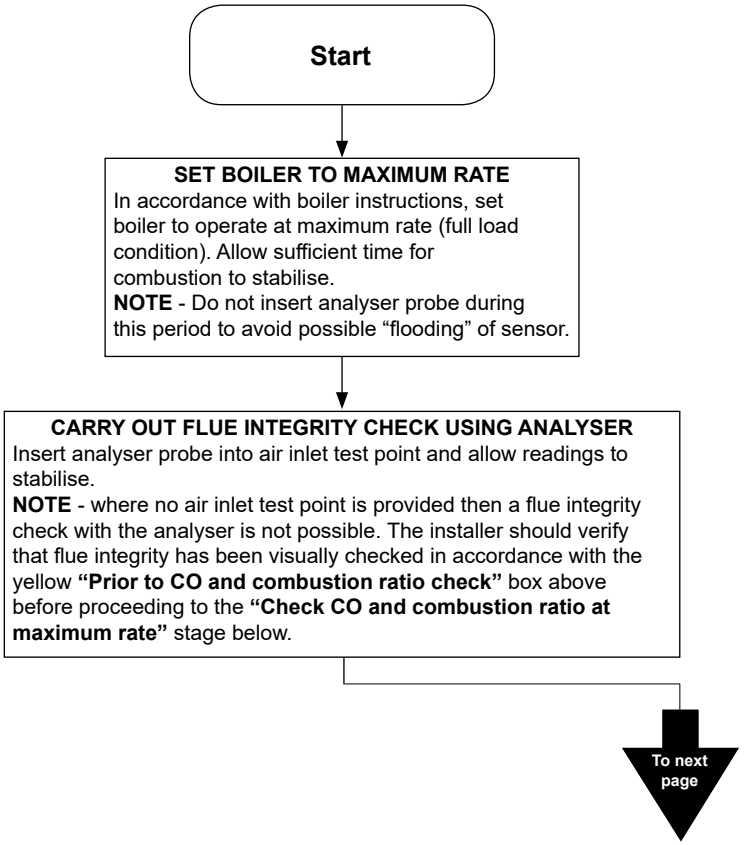

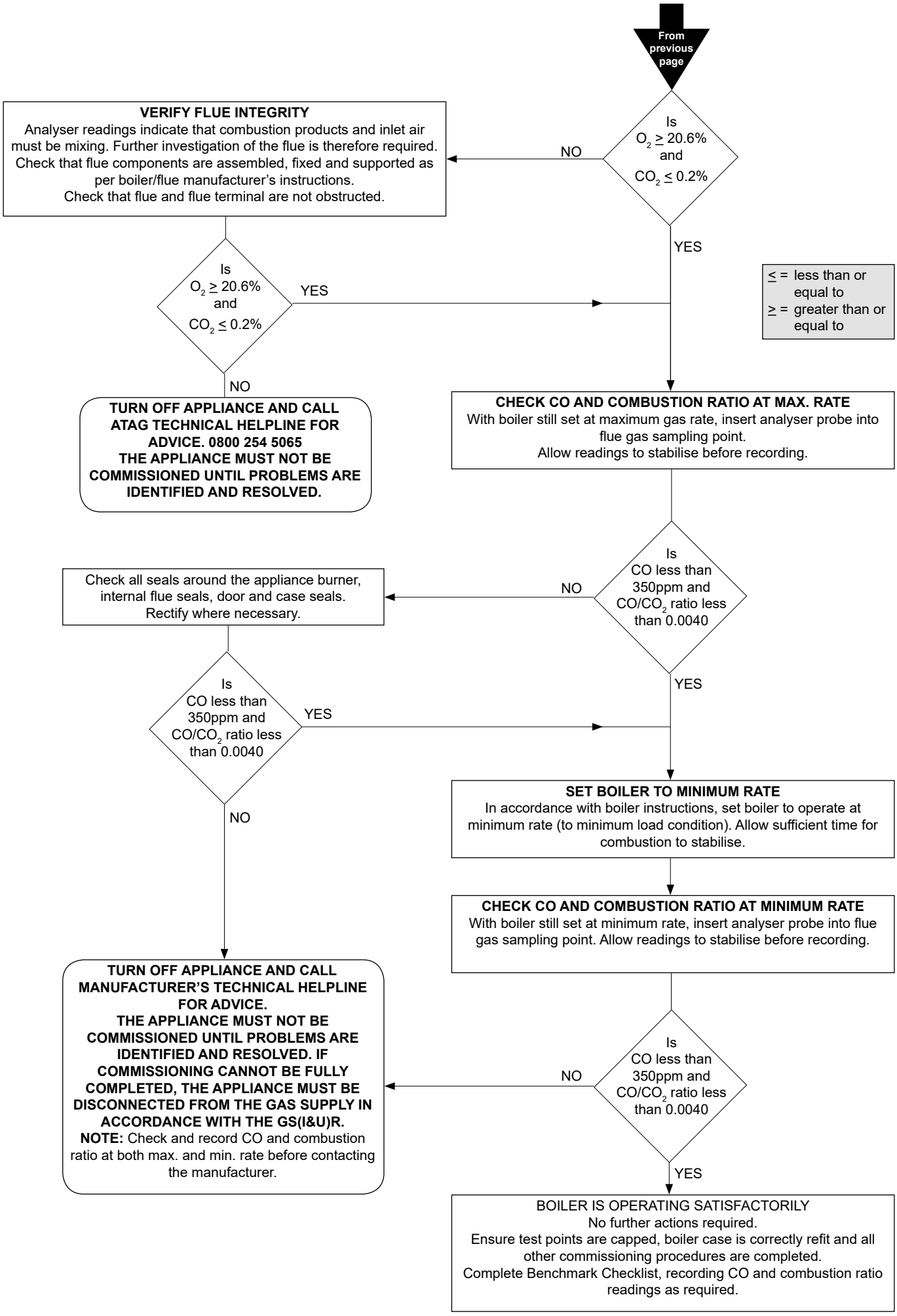
From previous page
Is $O_2 \geq 20.6\%$ and $CO_2 \leq 0.2\%$
NO
VERIFY FLUE INTEGRITY
Analyser readings indicate that combustion products and inlet air must be mixing. Further investigation of the flue is therefore required.
Check that flue components are assembled, fixed and supported as per boiler/flue manufacturer's instructions.
Check that flue and flue terminal are not obstructed.
Is $O_2 \geq 20.6\%$ and $CO_2 \leq 0.2\%$
YES
NO
TURN OFF APPLIANCE AND CALL ATAG TECHNICAL HELPLINE FOR ADVICE. 0800 254 5065
THE APPLIANCE MUST NOT BE COMMISSIONED UNTIL PROBLEMS ARE IDENTIFIED AND RESOLVED.
YES
≤ = less than or equal to
≥ = greater than or equal to
CHECK CO AND COMBUSTION RATIO AT MAX. RATE
With boiler still set at maximum gas rate, insert analyser probe into flue gas sampling point.
Allow readings to stabilise before recording.
Is CO less than 350ppm and CO/CO_2 ratio less than 0.0040
NO
Check all seals around the appliance burner, internal flue seals, door and case seals.
Rectify where necessary.
Is CO less than 350ppm and CO/CO_2 ratio less than 0.0040
YES
NO
YES
SET BOILER TO MINIMUM RATE
In accordance with boiler instructions, set boiler to operate at minimum rate (to minimum load condition). Allow sufficient time for combustion to stabilise.
CHECK CO AND COMBUSTION RATIO AT MINIMUM RATE
With boiler still set at minimum rate, insert analyser probe into flue gas sampling point. Allow readings to stabilise before recording.
Is CO less than 350ppm and CO/CO_2 ratio less than 0.0040
NO
YES
TURN OFF APPLIANCE AND CALL MANUFACTURER'S TECHNICAL HELPLINE FOR ADVICE.
THE APPLIANCE MUST NOT BE COMMISSIONED UNTIL PROBLEMS ARE IDENTIFIED AND RESOLVED. IF COMMISSIONING CANNOT BE FULLY COMPLETED, THE APPLIANCE MUST BE DISCONNECTED FROM THE GAS SUPPLY IN ACCORDANCE WITH THE GS(I&U)R.
NOTE: Check and record CO and combustion ratio at both max. and min. rate before contacting the manufacturer.
BOILER IS OPERATING SATISFACTORILY
No further actions required.
Ensure test points are capped, boiler case is correctly refit and all other commissioning procedures are completed.
Complete Benchmark Checklist, recording CO and combustion ratio readings as required.

14 Parameter chapter

When the boiler is installed, it is in principle ready to be put into service. Most settings of the control system are already programmed from factory.

To change this setting, proceed as follows:

14.1 Change the settings

The settings are accessable through a code.

1 From the controller Home screen, press the **BACK** and **OK** buttons at the same time for 7 seconds.

2 Turn the selector wheel to highlight **007** as the Technical Code.
Press **Save**.

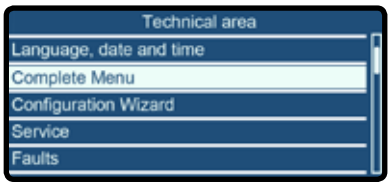

The screen left appears.

3 Turn the selector wheel to highlight **Complete Menu**.
Press **OK**.
It takes a while to load the Menu

The screen left appears.

This way you have access to the complete parameter level.

14.2 Parameter listing

In the table below you will find a complete overview of all available Parameters

Parameters in I-series boiler						
Chapter	Parameter number	Name	Describtion	Unit	Range	Default
2	Boiler Parameters					
2.0	General					
	2.0.0	DHW Set point	Water set point temperature in DHW mode during comfort periods	°C	40-65 (Combi)	60
					40-65 (combi)	60
	2.0.2	Gas Type	0 = Nat Gas			0
			1 = LPG		0 - 2	
			2 = G230			
	2.0.3	Maximum water temp	maximum absolute water temperature	°C	80-90	80
	2.0.4	Altitude	parameter for altitude compensation	m	0-7000	0
	2.0.5	Fan inc. Percentage	percentage of fan speed increase when reaching ionisation threshold	%	0 - 25	Do Not Change
	2.0.6	T-Gradient	Gradient Function	°C/min	0-15	5
2.1	Free					
	2.1.7	pump continious running	0 = Disabled		0-1	0
			1 = Enabled			
	2.1.8	Pomp mode max DHW	Max pump speed during DHW burning cycle	%	pump mode min - 100%	90
2.2	Settings					
	2.2.4	Thermoregulation	Thermoregulation function enable 0 = OFF 1 = ON		0 - 1	1
	2.2.7	Boiler Hybrid	Used to set the boiler as a part of a hybrid system		0 - 1	0
			(Energy manager presence detaction)			
	2.2.8	Boiler Version	Type of boiler selection		0 - 2	0
			0 = Combi			
			1 = Storage with NTC			
			2 = Storage with Thermostat			
2.3	Central Heating -1					
	2.3.1	Max CH Adjustable	CH power level adjustable by engineer to the level required	%	0 - 100	100
			by the building			
	2.3.7	CH pump overrun	CH post circulation time	Min	0 - 16	1
2.4	Central Heating - 2					
	2.4.5	Max pump Modulation	Maximum pump speed in CH mode	%	min - 100	95
	2.4.6	Min pump Modulation	Minimum pump speed in CH mode	%	25 - Max	50
	2.4.9	External Temp correction	Offset of the Outdoor temperature reading	°C	-3 - +3	0
2.5	Domestic Hot Water					
	2.5.0	Comfort function	DHW pre-heating or storage heating operation mode seletion		0 - 2	0
			0 = Disabled			
			1 = Time Based			
			2 = Always active			
2.6	Boiler manual settings					
	2.6.0	Manual mode activation	to enable or disable manual mode 0 = OFF 1 = ON		0 - 1	0
	2.6.1	Pump Control	0 = OFF 1 = ON		0 - 1	0
	2.6.2	Fan Control	0 = OFF 1 = ON		0 - 1	0
	2.6.3	Diverter valve control	0 = OFF 1 = ON		0 - 1	0
	2.6.7	External Pump	0 = OFF 1 = ON		0 - 1	0
2.7	Test & Utilities					
	2.7.0	Test mode	Chimney sweeper fucntion active 0 = OFF 1 = ON		0 - 1	0
	2.7.1	Air purge	Air purge function activation 0 - OFF 1 = ON		0 - 1	0
	2.7.3	Force backup	0 = OFF 1 - ON		0 - 1	0
	2.7.6	Force restore	1 = OFF 1 - ON		0 - 1	0
2.8	Reset Menu					
	2.8.0	Reset factory settings	OK = Yes ESC = No			
2.9	Others					
	2.9.0	GPI function	Selected input for GPI function		0 - 2	1
			0 = Burner block NO			
			1 = Burner block NC			
			2 = DHW Timer			
	2.9.1	Building Frost protection	0 = OFF 1 = ON		0 - 1	1

4	Zone 1 parameters					
4.0	Set Point					
	4.0.0	T Day	Room temperature set point for day period	°C	10 - 30	20
	4.0.1	T Night	Room temperature set point for night period	°C	10 - 30	15
	4.0.2	T set zone 1	Fixed T set for zone 1	°C	Para 4.2.5 to Para 4.2.6	85HT/50LT
			(used with Thermoregulation on OFF or Thermoregulation Type 1)			
	4.0.3	Zone Frost protection		°C	2 - 15	5
4.1	S/W Changeover					
	4.1.0	S/W changeover Activation	0 - OFF 1 - ON (only active when outside temperature influence)		0 - 1	0
	4.1.1	Threshold		°C	0 - 30	25
	4.1.2	Delay time	time before S/W changeover becomes active	min	0 - 300	300
4.2	Zone 1 settings					
	4.2.0	Zone 1 system type	0 = low temperature system 1 = high temperature system		0 - 1	1
	4.2.1.	Zone 1 thermoregulation type	0 = Fixed flow temperature		0 - 4	0
			1 = do not use			
			2 = Room temperature only			
			3 = Outdoor Temperature only (On/Off Thermostat works)			
			4 = Room + Outdoor temperature (e-bus thermostat needed)			
	4.2.2	Slope Heating Line	0,2 - 1 for Low temperature installations		0,2 - 3,5	0,6 LT / 1,5 HT
			1 - 3,5 for high temperature installations			
	4.2.3	Offset heating line	off set heating line adjustable per °C	°C	-7 - +7 LT -14 - +14 HT	0
			Low temperature system -7 - +7			
			High temperature system -14 - +14			
	4.2.4	Room influence proportional	Heating curve proportional Room influence		0 - 20	2 LT - 10 HT
	4.2.5	Maximum Temperature	Zone 1 Maximum Flow Temperature	°C	20 - 50LT 20 - 85HT	50 - LT 80 - HT
	4.2.6	Minimum Temperature	Zone 1 minimum Flow Temperature	°C	20 - 50LT 20 - 85HT	50 - LT 80 - HT
	4.2.8	Quick night set back	do not change		OFF - ON	OFF
	4.2.9	Heat Request Mode	do not change		0 - 2	0
4.3	Zone 1 Diagnostics					
	4.3.4	Heat Request Zone1	is there a Heat demand from this zone 0 - OFF 1 - ON		0-1	
4.7	Zone 1 Regulation parameters					
	4.7.0	Heating Type	0 = Floor Heating		0 - 5	1
			1 = Radiators			
			2 = Floor heating (main) + Radiators			
			3 = Radiators (main) + Floor heating			
			4 = Convection			
			5 = Air heating			
	4.7.1	Room influence	0 = OFF		0 - 3	0
			1 = Less			
			2 = Medium			
			3 = Good			
	4.7.2	Buiding insulation level	0 = Poor		0- 2	0
			1 = Average			
			2 = Good			
	4.7.3	Buiding size	0 = Small		0 - 2	0
			1 = Average			
			2 = Large			
	4.7.4	Climate Zone	Setting as a base for the heatline calculation		-60 - +50	-10
	4.7.5	Auto slope adaptation	0 = Off 1 - On		0 - 1	0
	4.7.6	Pre-heat Function	0 = Off 1 - On		0 - 1	1
5	Settings Zone 2	See zone 1 chapter 4				
6	Settings Zone 3	See zone 1 chapter 4				
8	Service Parameters					
8.0	Boiler statistics-1					
	8.0.0	diverter valve	number of divertervalve cycles	times		xx
	8.0.1	Pump	number of running hours pump	h		xx
	8.0.3	Boiler lifetime	number of hours since 1st boiler power up.	h		xx
8.1	Boiler statistics-2					
	8.1.0	Burner on CH	number of hours burner active for CH	h		xx
	8.1.1	Burner on DHW	number of hours burner active for DHW	h		xx
	8.1.3	Ignition	number of ignition cycles	times		xx
8.2	Boiler					
	8.2.1	Fan status	Fan: 0 = OFF 1 = ON			
	8.2.2	Fan speed	Number of revolutions	Rpm		
	8.2.4	Diverter valve position	position of the diverter valve 0 = DHW 1 = CH			
	8.2.5	DHW flowrate		l/min		
	8.2.7	pump modulation		%		
	8.2.8	gas power	actual boiler power based on fan revolutions	kW		
	8.2.9	system pressure		bar		
8.3	Boiler temperatures					
	8.3.0	CH T-Set	calculated target flow temperature	°C		
	8.3.1	CH flow temperature		°C		
	8.3.2	CH Return temperature		°C		
	8.3.3	DHW Temperature		°C		
	8.3.4	flue gas temperature	only if flue gas sensor is connected	°C		
	8.3.5	Outside temperature	only if outside sensor is connected or connected to the internet	°C		
8.4	Storage					
	8.4.0	n.a.				
	8.4.2	n.a.				
8.5	Service					
	8.5.0	Months to next maitenance	Months to go before next Maintenance warning comes up		0-60	12
	8.5.1	Maintenance warning active	switch on or of the maintenance warning 0 = OFF 1 = ON		0 - 1	0
	8.5.2	Maintenance warning reset	Reset the maintenance warning in the display and the timer		0 - 1	
8.6	Error History					
	8.6.0	Error history	overview of the last 10 errors occured			
	8.6.1	Reset Error list	OK = Yes ESC = No			
8.7	Free Parameter					
	8.7.5	Ionization Current				
	8.7.6	Safety Flame Sensor	burner status of the boiler 0 = OFF 1 = ON			
	8.7.7	CH Flow switch State	0 = OFF 1 = ON			

14.3 Weather compensation

To set the boiler to weather compensation, please set parameter 4.2.1 to 3 with an ON/OFF or OpenTherm controler or to 4 with an ATAG ONE zone or ATAG Cube.

1 Turn the selector wheel to highlight the Parameters Zone you want to set.
In this case **Zone 1 Parameters**.
Press **OK**.

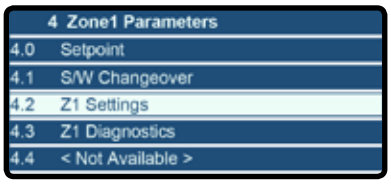

2 Turn the selector wheel to highlight **4.2 Z1 Settings**.
Press **OK**.

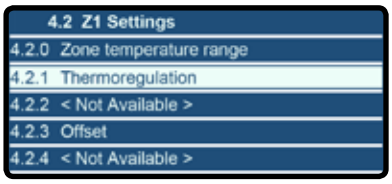

3 Turn the selector wheel to highlight **4.2.1 Thermoregulation**.
Press **OK**.

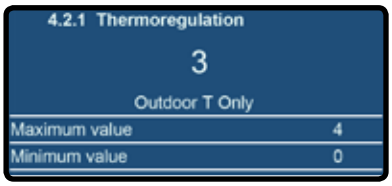

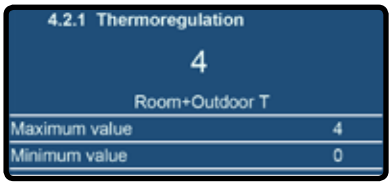

4 Make a choise between **3 Outdoor T Only** or **4 Room + Outdoor T**.

14.3.1 Setting the weather compensation

To set up the weather compensation, follow the steps below.

1 Turn the selector wheel to highlight the Parameters Zone you want to set.
In this case **Zone 1 Parameters**.
Press **OK**.

2 Turn the selector wheel to highlight **4.7 Zone regulation Parameters**.
Press **OK**.

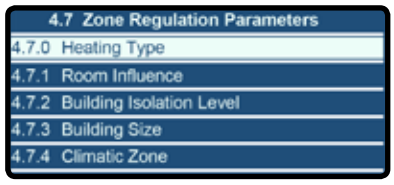

3 Turn the selector wheel to highlight **4.7.0 Heating Type**.
Press **OK**.
Make a choise between: **0 Underfoor** or
1 Radiator or
2 Underfloor (main) + radiator or
3 Radiators (main) + underfoor or
4 Convector or
5 Air heating

Press **BACK** to the **4.7 Zone regulation Parameters screen**.

4 Turn the selector wheel to highlight **4.7.2 Building Isolation Level**.
Press **OK**.
Make a choise between: **0 Poor** or
1 Average or
2 Good

Press **BACK** to the **4.7 Zone regulation Parameters screen**.

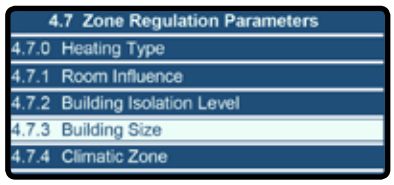

5 Turn the selector wheel to highlight **4.7.3 Building Size**.
Press **OK**.
Make a choise between: **0 Small** or
1 Average or
2 Large

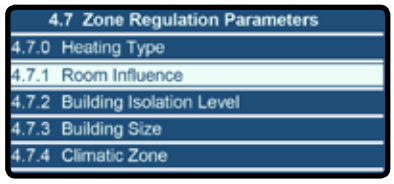

6 Turn the selector wheel to highlight **4.7.1 Room Influence**.
Press **OK**.

7 Turn the selector wheel to set the Room Influence **0 OFF**.

All these settings below calculate the ideal heating line for this specific property. For the Heating type, Building Isolation Level and the Building Size.

Examples:

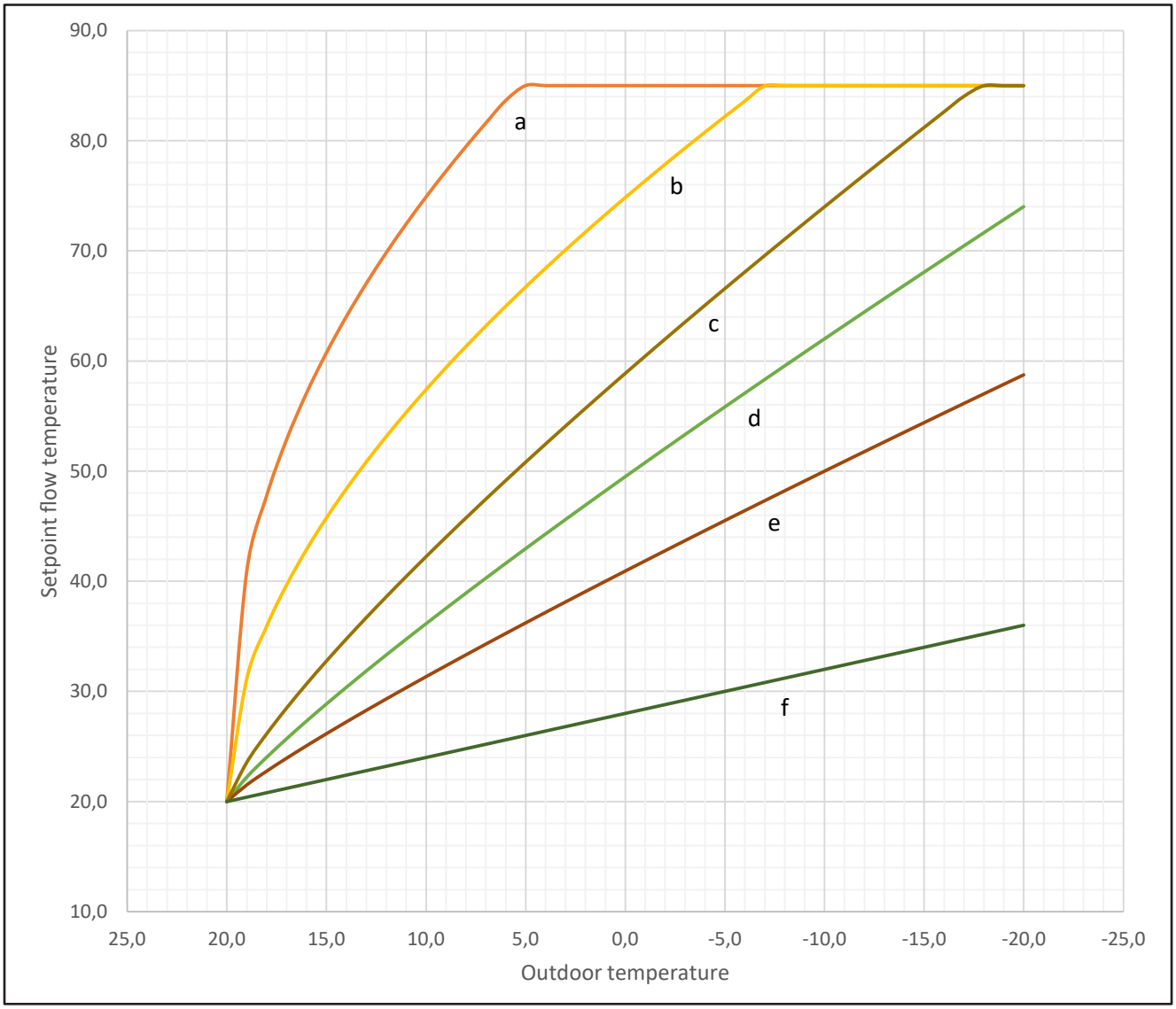

a.	Heating Type	*Air heating*
	Building Isolation Level	*Poor*
	Building size	*Small*
b.	Heating Type	*Convectors*
	Building Isolation Level	*Average*
	Building size	*Average*
c.	Heating Type	*Radiators*
	Building Isolation Level	*Average*
	Building size	*Average*
d.	Heating Type	*Radiators (main) + floor*
	Building Isolation Level	*Good*
	Building size	*Average*
e.	Heating Type	*Underfloor*
	Building Isolation Level	*Average*
	Building size	*Average*
f.	Heating Type	*Underfloor*
	Building Isolation Level	*Good*
	Building size	*Average*

15 Routine servicing

ATAG Heating Technology advises on an interim service inspection with a flue gas analyser. A full strip down service is recommended at regular intervals or where analyser readings are not within correct safety standards.

Required tools:
- Cross head screwdriver;
- T-handle key set with 3 bits (hex key 4mm, hex key 5mm and cross head PZ2);
- Open end wrench 8mm.

15.1 Interim Service

For reasons of safety and economy, it is recommended that the boiler is serviced annually. Servicing must be performed by a competent person in accordance with BS 7967.

After servicing, complete the relevant Service Interval Record section of the Benchmark Checklist located on the inside back page of this document.

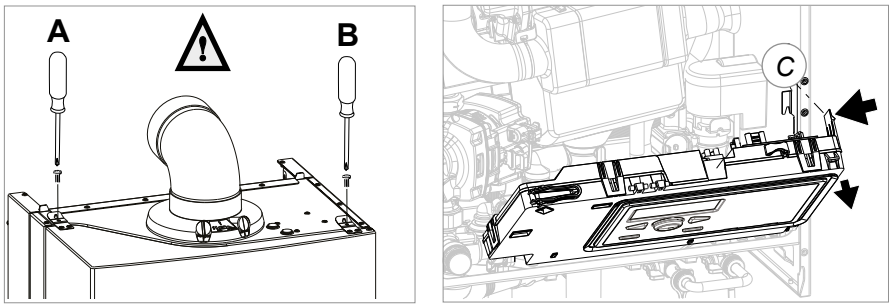

Figure 16.a

In order to perform maintenance, the following actions have to be taken;
- Switch off the electrical power to the boiler;
- Remove the screws from the 2 fasteners A and B (see fig. 16.a);
- Unlock the fasteners A and B and remove the cover in a forward motion.

Always refit and turn the 2 screws tight in the fasteners A and B.

Air box/cover
The cover also doubles as air box:
- Clean the air box/cover with a cloth and a non-abrasive cleaner;

Siphon (see fig. 16.b)
The degree of pollution resedue in the siphon is an important indication for the need of maintenance
- Turn the control unit towards by moving the handle (C) slightly to the left (see figure 16.a);
- Turn/pull the sealing ring (1) downwards;
- Turn the siphon securing clip (2) anti-clockwise;
- Pull the siphon cup (3) and siphon pipe (4) out of the heat exchanger;
- Take the siphon cup and pipe out of the boiler by moving it downwards or turn it in forward motion upwards along the heat exchanger;
- Clean the parts by rinsing them with water;
- Check the O-ring of the siphon cup and replace it if necessary;
- Grease the O-ring again with acid-free O-ring grease to simplify the reassembly.

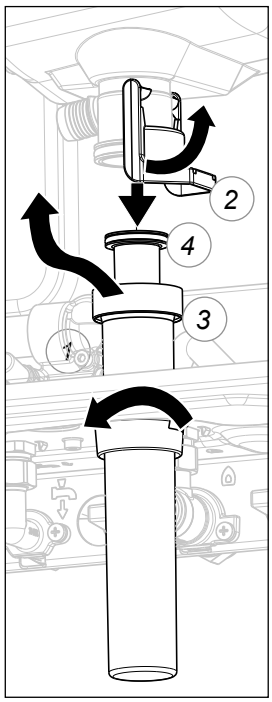

Reassembly takes place in reverse order.
- fill the siphon with **150 ml of water**.
- If a leakage has occurred to the siphon, replace the entire siphon.

If the interior of the boiler looks heavily polluted with dust / dirt, then a full service should be performed even with acceptable combustion readings (CO/CO_2 ratio).

Put the boiler back into operation and carry out a flue gas analysis (see page 46).

Always put back the cover after (maintenance) work and secure it with screws A and B.
Always refit and turn the 2 screws tight in the fasteners A and B.

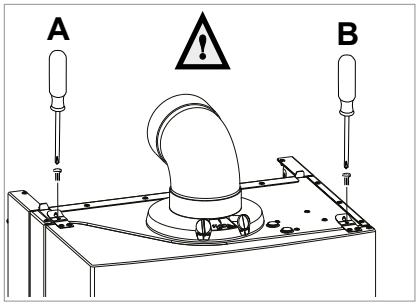

Note: During routine servicing, and after any maintenance or change of part of the combustion circuit, the following must be checked:

Checking the CO_2
- Check the CO_2 readings at full load and low load as described in section 13.1

Checking CO readings and Combustion Performance (CO/CO_2 ratio)
- Check CO readings and Combustion Performance as described in Section 13.2

The combustion reading (CO/CO_2 ratio) must be less than 0.004. If the combustion reading (CO/CO_2 ratio) is greater than this, and the integrity of the complete flue system and combustion circuit seals has been verified, and the inlet gas pressure and gas rate are satisfactory either:
- Perform the ‘Full Service’.
- Perform ‘Setting the Gas Valve’.

15.2 Full Service

For reasons of safety and economy, it is recommended that the boiler is serviced annually. Servicing must be performed by a competent person in accordance with BS 7967-4.

After servicing, complete the relevant Service Interval Record section of the Benchmark Checklist located on the inside back page of this document.

Where a full service is required the following steps must be followed:
- Carry out the actions as described in section 15.1 Interim Service.

Fan unit and burner cassette (see fig. 13.2.b-f)

- Remove the velcro from the silencer and remove the silencer (1);
- Unscrew the coupling (2) of the gas block and the coupling on the venturi (3) and remove the gasline (4);
- **Replace the gaskets of the gasline (O-ring) with new ones**;

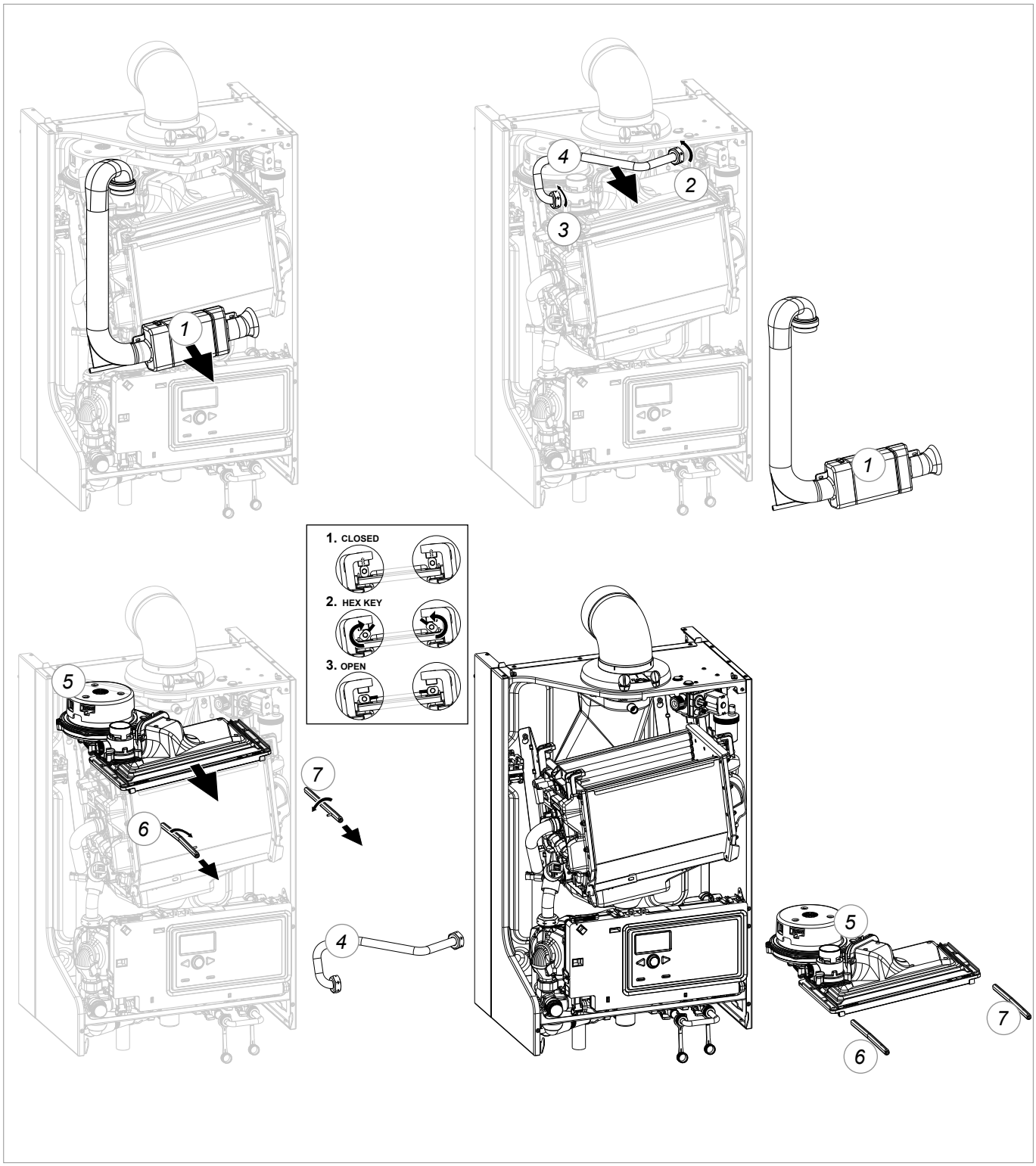

Figure 16.c

- Disconnect the electrical connections from the fan (5);
- Turn the left (6) and right (7) clamp bars a quarter turn with the hex key and pull these out in a forward motion. Mind the direction of rotation (red control cams);
- Now lift the complete fan unit (5) with the upper tray of the heat exchanger and remove it in a forward motion;
- Turn the unit up side down and remove the burner cassette (8) from the ventilator unit;
- Check the burner cassette for wear and tear, pollution and any breakages. Clean the burner cassette with a soft brush and vacuum cleaner. In the case of breakages, always replace the complete burner cassette (8);

The following operations must be performed carefully in relation to the vulnerability of the non return valve.

- After removing the burner cassette (8) the non return valve (12) becomes visible. Check that the non return valve entire circumference closes / seals completely. The valve should be able to move freely from fully open to fully closed (see fig. 16.e). Replace the non return valve if the valve does not seal properly. Follow the instructions supplied with the new part.

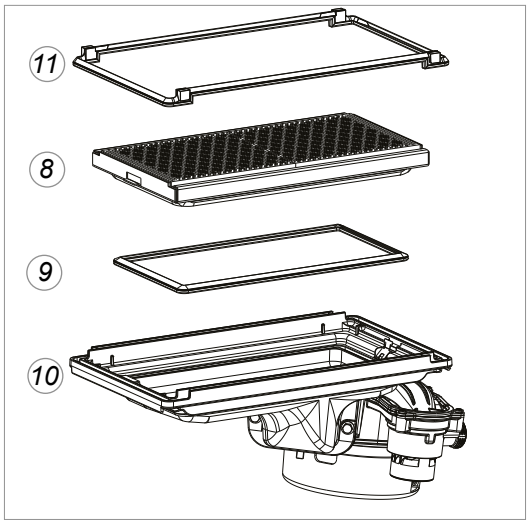

Figure 16.d

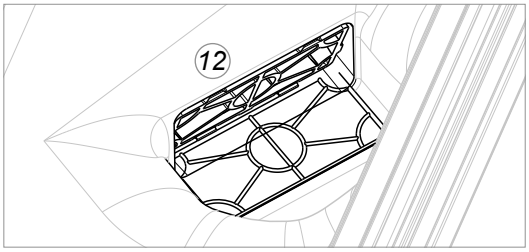

Figure 16.e

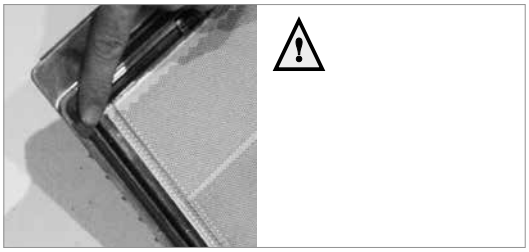
Figure 16.f

- Replace the gasket (9) between the burner (8) and upper casing (10) ;
- Replace the gasket (11) between the upper casing (10) and exchanger (Note the position in figure 16.f):
- Check the venturi (13) for pollution and clean them with a soft brush in combination with a vacuum cleaner, if necessary.

If the inside of the boiler casing is heavily polluted with dust, it is likely that the fan impeller is also polluted. To clean the fan, it has to be removed from the upper tray and the venturi. Clean the impeller with a soft brush and a vacuum cleaner. Replace the gasket and take care that the new gasket is installed properly when reassembling the fan parts.

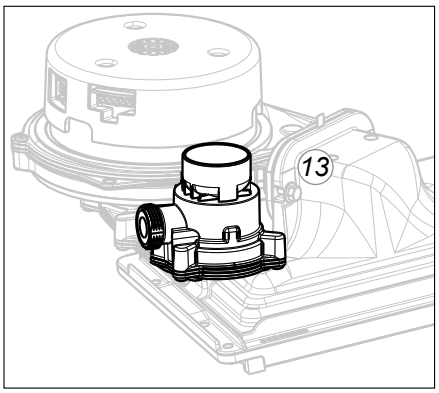

Figure 16.g

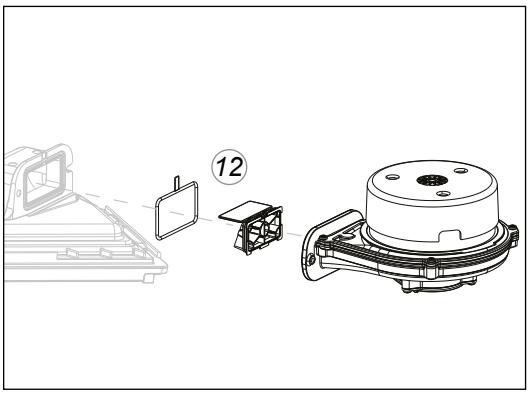

Figure 16.h

Reassembly takes place in reverse order.

<u>Heat exchanger</u>

- Check the heat exchanger for pollution. Clean it, if necessary, with a soft brush and a vacuum cleaner. Avoid any pollution falling down.

TOP-FLUSHING THE EXCHANGER WITH WATER IS NOT ALLOWED.

Reassembly takes place in reverse order.

During installation pay attention to the correct position of the clamp bars. These have to be in a vertical position.

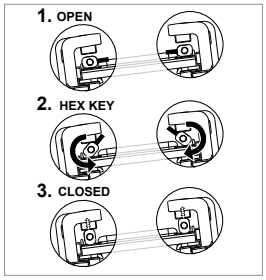

Ignition electrode
Replacing the ignition electrode is necessary when the pins are worn.
If the inspection hole is damaged, the entire ignition electrode has to be replaced.

It is replaced as follows:
- Take away the plug connections on the ignition electrode;
- Push the clip on top of the electrode upwards and take away the electrode;
- Remove and replace the gasket;

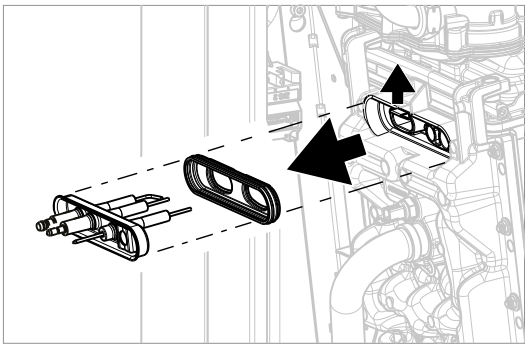

Figure 16.g

Reassembly takes place in reverse order.

Always replace the gaskets of the removed parts during maintenance.

Put the boiler back into operation and carry out a flue gas analysis (see page 46).

Always put back the cover after (maintenance) work and secure it with screws A and B.
Always refit and turn the 2 screws tight in the fasteners A and B.

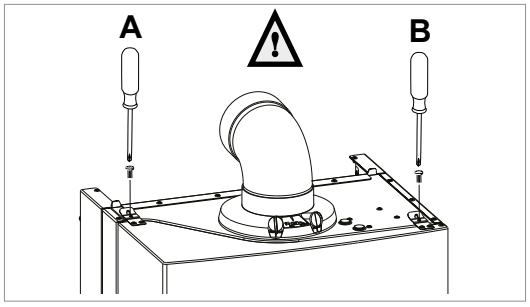

Note: During routine servicing, and after any maintenance or change of part of the combustion circuit, the following must be checked:

Checking the CO_2
- Check the CO_2 readings at full load and low load as described in section 13.1

Checking CO readings and Combustion Performance (CO/CO_2 ratio)
- Check CO readings and Combustion Performance as described in Section 13.2

The combustion reading (CO/CO_2 ratio) must be less than 0.004. If the combustion reading (CO/CO_2 ratio) is greater than this, and the integrity of the complete flue system and combustion circuit seals has been verified, and the inlet gas pressure and gas rate are satisfactory either:
- Perform the 'Full Service'.
- Perform 'Setting the Gas Valve'.

Please contact your installer or ATAG Heating Technology Ltd. for further details. Contact details can be found on the back page of this manual.

After servicing, complete the relevant Service Interval Record section of the Benchmark Checklist located on the inside back page of the document.

15.3 Component replacement

In the event that parts require replacement, use only genuine parts supplied by ATAG Heating Technology Ltd.

15.4 User's instructions

Advise the user that for continued efficient and safe operation, the boiler should be serviced at least once a year by qualified servicing company. It is important and strongly recommended that arrangements are made for a maintenance agreement with a qualified servicing company to ensure regular servicing of the boiler. Please contact ATAG Heating Technology Ltd. for further details. Contact details can be found on the back page of this manual.

15.5 Warranty

For the warranty conditions we refer to the Warranty Card that is supplied with the boiler.

16 Error codes and fault finding

A detected failure is indicated on the screen in blocking or error messages.

- **Blocking code**
  A blocking code is a temporary error that can be automatically corrected by the boiler.

- **Error code**
  A error code requires the error to be reset and/or corrected for the boiler to go back into a normal operating mode. A “Press the Reset button” message appears on the screen.

An overview of the most common blocking and error codes are listed below.

101	Overheat
102	Pressure Sensor Error
104	Flow Check Failed
108	Pressure < Pmin (< 0.5 bar), Filling needed
1P4	Pressure < Pmin (0.5 - 0.8 bar), Filling needed
109	Pressure > Pmax
110	Send Probe Damaged
112	Return Probe Damaged
114	Outdoor Sensor Damaged
141	CH Flow Switch open
201	DHW Probe Damaged (Combi)
203	Tank Probe Damaged (Solo)
303	PCB Fault
304	Too many resets
501	No flame detected
612	Fan error (fan does not start up)

Example of screen of error message

16.1 Reset a Fault code

1 When an error occurs, the fault code and description appears on the screen.

2 To reset the fault code, press the **RESET** button.

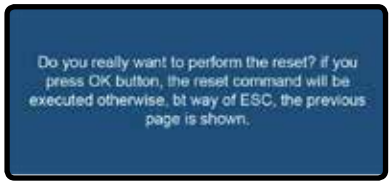

3 The message on the screen left appears.
- Press **OK** to reset the error, otherwise the previous screen is shown.

4 The **Reset in Progress** message appears.

5 After a while the **Fault Solved** message appears.

After the code is reset, the Home screen appears.

16.2 View Error code History

1 From the controller Home screen, press the **BACK** and **OK** buttons at the same time for 7 seconds.

2 Turn the selector wheel to highlight **007** as the Technical Code.
Press **Save**.

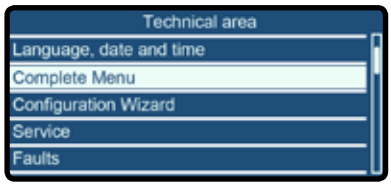

The screen left appears.

3 Turn the selector wheel to highlight **Complete Menu**.
Press **OK**.

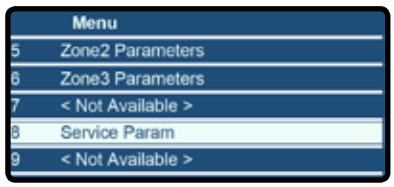

The screen left appears.

4 Turn the selector wheel to highlight **8 Service Param**.
Press **OK**.

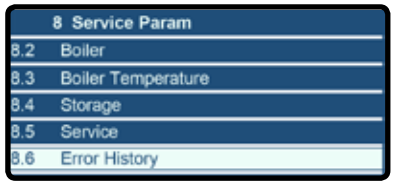

The screen left appears.

5 Turn the selector wheel to highlight **8.6 Error History**.
Press **OK**.

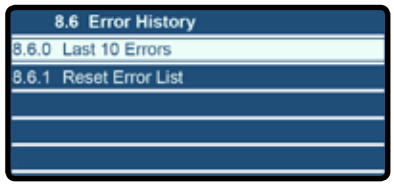

The screen left appears.

6 Option **8.6.0 Last 10 Errors** is highlighted.
Press **OK**.
A survey of the last 10 Errors appears.

An example of an error message on the left.

Annex A System water additives

When the filling water requirements as referred to in chapter Water Quality have been met, certain additives are allowed for the below mentioned applications and related dosage. Warranty on ATAG delivered installation products expires, if these additives and concentrations are not used in accordance with this annex.

Additive type	Supplier and specifications	Max. concentration	Application
Corrosion inhibitors	ATAG Central Heating Protector. Build Cert Approved	500 ml / 100 litres	Suitable for mixed metal and plastic systems. Prevents corrosion and limscale.
	Sentinel X100 Corrosion resistant protection agent of CH systems Kiwa certified	1-2 l/100 litres CH water content	Aqueous solution of organic and inorganic agents preventing corrosion and scale forming
	Fernox F1 Protector Corrosion resistant protection agent of CH systems Kiwa certified KIWA-ATA K62581, Belgaqua certified Cat III	500 ml can or 265 ml Express / 100 litres CH water content	Preventing corrosion and scale forming
Anti-freeze	Kalsbeek Monopropyleneglycol / propane-1,2-diol + inhibitors AKWA-Colpro KIWA-ATA Nr. 2104/1	50% w/w	Anti-freeze
	Tyfocor L Monopropyleneglycol / propane-1,2-diol + inhibitors	50% w/w	Anti-freeze
	Sentinel X500 Monopropyleneglycol + inhibitors Kiwa certified	20-50% w/w	Anti-freeze
	Fernox Alphi 11 Monopropyleneglycol + inhibitors Kiwa certified KIWA-ATA K62581, Belgaqua certified Cat III	25-50% w/w	Anti-freeze in combination with F1 Protector
System cleaners	ATAG Central Heating Universal Cleaner	500 ml / 100 litres	Suitable for mixed metal and plastic systems. Disperses sludge, limescale and other deposits.
	Sentinel X300 Solution of phosphate, organic heterocyclic compounds, polymers and organic bases Kiwa certified	1 litre / 100 litres	For new CH installations Removes oils/grease and flow control agents
	Sentinel X400 Solution of synthetic organic polymers	1-2 litres / 100 litres	For cleaning existing CH-installations Removes sediments.
	Sentinel X800 Jetflo Aqueous emulsion of dispersants, moistening agents and inhibitors	1-2 litres / 100 litres	For cleaning new and existing CH-installations Removes iron and lime-related sediments.
	Fernox F3 Cleaner Liquid pH neutral universal cleaner for pre-commissioning new systems	500 ml / 100 litres	For cleaning new and existing CH-installations Removes sludge, limescale and other debris.
	Fernox F5 Cleaner, Express pH neutral universal cleaner concentrate for pre-commissioning new systems	295 / 100 litres	For cleaning new and existing CH-installations Removes sludge, limescale and other debris.

ATAG support the use of inhibitors suitable for mixed metal applications that keep the pH level between 6 and 8. Dosage levels as per manufacturers instructions. Preferred inhibitor suppliers are ATAG Heating Technology, Fernox and Sentinel.

Annex B Declaration of conformity

CE DECLARATION OF CONFORMITY

Hereby declares ATAG Verwarming Nederland BV that,

the condensing boiler types: ATAG

i12R i15R i18R i24R i32R i40R

are in conformity with the following standards:

EU Gas Appliance Regulation	2016/426/EU	EN 15502-1:	2012
		EN 15502-2-1:	2012
		EN 60335-1:	2011
		EN 60335-2-102:	2010
Boiler Efficiency Directive	92/42/EEC	EN 15502-2-2:	2014
Low Voltage Directive	2014/35/EU	EN 60335-1:	2011
		EN 60335-2-102:	2010
EMC Directive	2014/30//EU	EN 61000-3-2:	2013
		EN 61000-3-3:	2014
		EN 60335-2-102:	2010
		EN 55014-1:	2011
		EN 55014-2:	2008
Ecodesign Directive	2009/125/EC	EN 13203-2:	2014
		EN 15036-1:	2006
		EN 15502-1:	2012
		regulation (EU) 813/2013	

This product is designated with CE number:

CE – 0063CQ3634

and that the products are in conformity with EC type-examination certificate number E0430, as stated by KIWA-Gastec Certification BV, Apeldoorn, The Netherlands.

Date : 16 Augustus 2018

Signature :

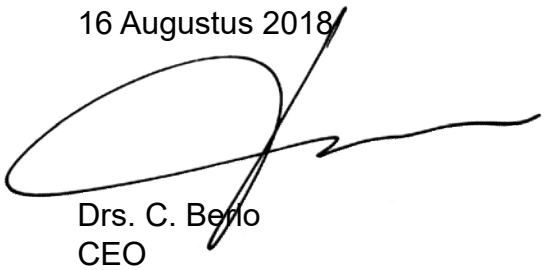

Full name : Drs. C. Benio
CEO

ATAG Verwarming

Adres: Galileïstraat 27, 7131 PE Lichtenvoorde • **Postadres:** Postbus 105, 7130 AC Lichtenvoorde
Telefoon: +31(0) 544 391777, **Fax:** +31(0) 544 391703
E-mail: info@atagverwarming.com **Internet:** http//www.atagverwarming.nl

Annex C Short parts list

iR Range

Description	Qty	ATAG Pt. No.
Heat exchanger iCon1	1	S4863100
Heat exchanger iCon2	1	S4863200
TOP HMI	1	S4916610
PCB Controler	1	S4933000
Fan iCon 1 325VDC	1	S4946500
Fan iCon 2 325VDC	1	S4946600
Gas valve	1	S4856300
Burner complete iCon1	1	S4849100
Burner complete iCon2	1	S4849200
Condensate tray iCon1	1	S4863400
Condensate tray iCon2	1	S4863500
Igniter & gasket	1	S4863600
Igniter transformer	1	S4851000
Cable harness regular compl.	1	S4947100
Air vent	1	S4419110
Siphon complete set	1	S4863700
Igniter cables	1	S4863800
NTC flow	1	S4891600
Flex hose expansion vessel	1	S4856900
Maintenance Set iCon1	1	S4867900
Maintenance Set iCon2	1	S4868000
Silencer iCon 1 & 2	1	S4847800
Gasket condensate tray iCon1	1	S4854600
Gasket condensate tray iCon2	1	S4854700
NTC return	1	S4746000
Fuse 2.5 AT (250V) 2pcs	1	S4933600
Clamp bar long	1	S4850900
Flow switch regular	1	S4856200
Connector pump (Green)	1	S4921000
Connector Y-Plan (Turquoise)	1	S4921100
Flue Gas Non Return Valve	1	AA07400U

Benchmark Commissioning and Servicing Section

It is a requirement that the boiler is installed and commissioned to the manufacturers instructions and the data fields on the commissioning checklist completed in full.

To instigate the boiler guarantee the boiler needs to be registered with the manufacturer within one month of the installation.

To maintain the boiler guarantee it is essential that the boiler is serviced annually by a Gas Safe registered engineer who has been trained on the boiler installed. The service details should be recorded on the Benchmark Service Interval Record and left with the householder.

www.centralheating.co.uk

© Heating and Hotwater Industry Council (HHIC)

GAS BOILER SYSTEM COMMISSIONING CHECKLIST

This Commissioning Checklist is to be completed in full by the competent person who commissioned the boiler as a means of demonstrating compliance with the appropriate Building Regulations and then handed to the customer to keep for future reference.

Failure to install and commission according to the manufacturer's instructions and complete this Benchmark Commissioning Checklist will invalidate the warranty. This does not affect the customer's statutory rights.

Customer name:	Telephone number:
Address:	
Boiler make and model:	
Boiler serial number:	
Commissioned by (PRINT NAME):	Gas Safe register number:
Company name:	Telephone number:
Company address:	
	Commissioning date:
To be completed by the customer on receipt of a Building Regulations Compliance Certificate*	
Building Regulations Notification Number (if applicable):	

CONTROLS (tick the appropriate boxes)				
Time and temperature control to heating	Room thermostat and programmer/timer		Programmable room thermostat	
	Load/weather compensation		Optimum start control	
Time and temperature control to hot water	Cylinder thermostat and programmer/timer		Combination Boiler	
Heating zone valves	Fitted		Not required	
Hot water zone valves	Fitted		Not required	
Thermostatic radiator valves	Fitted		Not required	
Automatic bypass to system	Fitted		Not required	
Boiler interlock			Provided	

ALL SYSTEMS				
The system has been flushed and cleaned in accordance with BS7593 and boiler manufacturer's instructions			Yes	
What system cleaner was used?				
What inhibitor was used?			Quantity	litres
Has a primary water system filter been installed?	Yes		No	

CENTRAL HEATING MODE measure and record:			
Gas rate	m^3/hr	**OR**	ft^3/hr
Burner operating pressure (if applicable)	mbar	**OR** Gas inlet pressure	mbar
Central heating flow temperature			°C
Central heating return temperature			°C

COMBINATION BOILERS ONLY			
Is the installation in a hard water area (above 200ppm)?	Yes		No
If yes, and if required by the manufacturer, has a water scale reducer been fitted?	Yes		No
What type of scale reducer has been fitted?			
DOMESTIC HOT WATER MODE Measure and Record:			
Gas rate	m^3/hr	**OR**	ft^3/hr
Burner operating pressure (at maximum rate)	mbar	**OR** Gas inlet pressure at maximum rate	mbar
Cold water inlet temperature			°C
Hot water has been checked at all outlets	Yes	Temperature	°C
Water flow rate			l/min

CONDENSING BOILERS ONLY	
The condensate drain has been installed in accordance with the manufacturer's instructions and/or BS5546/BS6798	Yes

ALL INSTALLATIONS						
Record the following:	At max. rate:	CO	ppm	**AND**	CO/CO_2	Ratio
	At min. rate: (where possible)	CO	ppm	**AND**	CO/CO_2	Ratio
The heating and hot water system complies with the appropriate Building Regulations						Yes
The boiler and associated products have been installed and commissioned in accordance with the manufacturer's instructions						Yes
The operation of the boiler and system controls have been demonstrated to and understood by the customer						Yes
The manufacturer's literature, including Benchmark Checklist and Service Record, has been explained and left with the customer						Yes

Commissioning Engineer's Signature
Customer's Signature
(To confirm satisfactory demonstration and receipt of manufacturer's literature)

*All installations in England and Wales must be notified to Local Authority Building Control (LABC) either directly or through a Competent Persons Scheme. A Building Regulations Compliance Certificate will then be issued to the customer.

benchmark COLLECTIVE MARK
THE MARK OF QUALITY FOR THE INSTALLATION, COMMISSIONING AND SERVICING OF DOMESTIC HEATING AND HOT WATER SYSTEMS

© Heating and Hotwater Industry Council (HHIC)

SERVICE RECORD

It is recommended that your heating system is serviced regularly and that the appropriate Service Interval Record is completed.

Service Provider

Before completing the appropriate Service Record below, please ensure you have carried out the service as described in the manufacturer's instructions. Always use the manufacturer's specified spare part when replacing controls.

SERVICE 01						Date:
Engineer name:						
Company name:						
Telephone No:						
Gas safe register No:						
Record:	At max. rate:	CO	ppm	**AND**	CO_2 %	
	At min. rate: (Where Possible)	CO	ppm	**AND**	CO_2 %	
Comments:						
Signature						

SERVICE 02						Date:
Engineer name:						
Company name:						
Telephone No:						
Gas safe register No:						
Record:	At max. rate:	CO	ppm	**AND**	CO_2 %	
	At min. rate: (Where Possible)	CO	ppm	**AND**	CO_2 %	
Comments:						
Signature						

SERVICE 03						Date:
Engineer name:						
Company name:						
Telephone No:						
Gas safe register No:						
Record:	At max. rate:	CO	ppm	**AND**	CO_2 %	
	At min. rate: (Where Possible)	CO	ppm	**AND**	CO_2 %	
Comments:						
Signature						

SERVICE 04						Date:
Engineer name:						
Company name:						
Telephone No:						
Gas safe register No:						
Record:	At max. rate:	CO	ppm	**AND**	CO_2 %	
	At min. rate: (Where Possible)	CO	ppm	**AND**	CO_2 %	
Comments:						
Signature						

SERVICE 05						Date:
Engineer name:						
Company name:						
Telephone No:						
Gas safe register No:						
Record:	At max. rate:	CO	ppm	**AND**	CO_2 %	
	At min. rate: (Where Possible)	CO	ppm	**AND**	CO_2 %	
Comments:						
Signature						

SERVICE 06						Date:
Engineer name:						
Company name:						
Telephone No:						
Gas safe register No:						
Record:	At max. rate:	CO	ppm	**AND**	CO_2 %	
	At min. rate: (Where Possible)	CO	ppm	**AND**	CO_2 %	
Comments:						
Signature						

SERVICE 07						Date:
Engineer name:						
Company name:						
Telephone No:						
Gas safe register No:						
Record:	At max. rate:	CO	ppm	**AND**	CO_2 %	
	At min. rate: (Where Possible)	CO	ppm	**AND**	CO_2 %	
Comments:						
Signature						

SERVICE 08						Date:
Engineer name:						
Company name:						
Telephone No:						
Gas safe register No:						
Record:	At max. rate:	CO	ppm	**AND**	CO_2 %	
	At min. rate: (Where Possible)	CO	ppm	**AND**	CO_2 %	
Comments:						
Signature						

SERVICE 09						Date:
Engineer name:						
Company name:						
Telephone No:						
Gas safe register No:						
Record:	At max. rate:	CO	ppm	**AND**	CO_2 %	
	At min. rate: (Where Possible)	CO	ppm	**AND**	CO_2 %	
Comments:						
Signature						

SERVICE 10						Date:
Engineer name:						
Company name:						
Telephone No:						
Gas safe register No:						
Record:	At max. rate:	CO	ppm	**AND**	CO_2 %	
	At min. rate: (Where Possible)	CO	ppm	**AND**	CO_2 %	
Comments:						
Signature						

*All installations in England and Wales must be notified to Local Authority Building Control (LABC) either directly or through a Competent Persons Scheme. A Building Regulations Compliance Certificate will then be issued to the customer.

© Heating and Hotwater Industry Council (HHIC)

SERVICE RECORD

It is recommended that your heating system is serviced regularly and that the appropriate Service Interval Record is completed.

Service Provider

Before completing the appropriate Service Record below, please ensure you have carried out the service as described in the manufacturer's instructions. Always use the manufacturer's specified spare part when replacing controls.

SERVICE 11					Date:
Engineer name:					
Company name:					
Telephone No:					
Gas safe register No:					
Record:	At max. rate:	CO ppm	**AND**	CO_2 %	
	At min. rate: (Where Possible)	CO ppm	**AND**	CO_2 %	
Comments:					
Signature					

SERVICE 12					Date:
Engineer name:					
Company name:					
Telephone No:					
Gas safe register No:					
Record:	At max. rate:	CO ppm	**AND**	CO_2 %	
	At min. rate: (Where Possible)	CO ppm	**AND**	CO_2 %	
Comments:					
Signature					

SERVICE 13					Date:
Engineer name:					
Company name:					
Telephone No:					
Gas safe register No:					
Record:	At max. rate:	CO ppm	**AND**	CO_2 %	
	At min. rate: (Where Possible)	CO ppm	**AND**	CO_2 %	
Comments:					
Signature					

SERVICE 14					Date:
Engineer name:					
Company name:					
Telephone No:					
Gas safe register No:					
Record:	At max. rate:	CO ppm	**AND**	CO_2 %	
	At min. rate: (Where Possible)	CO ppm	**AND**	CO_2 %	
Comments:					
Signature					

SERVICE 15					Date:
Engineer name:					
Company name:					
Telephone No:					
Gas safe register No:					
Record:	At max. rate:	CO ppm	**AND**	CO_2 %	
	At min. rate: (Where Possible)	CO ppm	**AND**	CO_2 %	
Comments:					
Signature					

SERVICE 16					Date:
Engineer name:					
Company name:					
Telephone No:					
Gas safe register No:					
Record:	At max. rate:	CO ppm	**AND**	CO_2 %	
	At min. rate: (Where Possible)	CO ppm	**AND**	CO_2 %	
Comments:					
Signature					

SERVICE 17					Date:
Engineer name:					
Company name:					
Telephone No:					
Gas safe register No:					
Record:	At max. rate:	CO ppm	**AND**	CO_2 %	
	At min. rate: (Where Possible)	CO ppm	**AND**	CO_2 %	
Comments:					
Signature					

SERVICE 18					Date:
Engineer name:					
Company name:					
Telephone No:					
Gas safe register No:					
Record:	At max. rate:	CO ppm	**AND**	CO_2 %	
	At min. rate: (Where Possible)	CO ppm	**AND**	CO_2 %	
Comments:					
Signature					

SERVICE 19					Date:
Engineer name:					
Company name:					
Telephone No:					
Gas safe register No:					
Record:	At max. rate:	CO ppm	**AND**	CO_2 %	
	At min. rate: (Where Possible)	CO ppm	**AND**	CO_2 %	
Comments:					
Signature					

SERVICE 20					Date:
Engineer name:					
Company name:					
Telephone No:					
Gas safe register No:					
Record:	At max. rate:	CO ppm	**AND**	CO_2 %	
	At min. rate: (Where Possible)	CO ppm	**AND**	CO_2 %	
Comments:					
Signature					

*All installations in England and Wales must be notified to Local Authority Building Control (LABC) either directly or through a Competent Persons Scheme. A Building Regulations Compliance Certificate will then be issued to the customer.

© Heating and Hotwater Industry Council (HHIC)

ATAG

ATAG Heating Technology Ltd. • 80 Churchill Square Business Centre • Kings Hill • West Malling • Kent ME19 4YU
Phone: 0800 254 5061 • E-mail: info@atagheating.co.uk • Internet: www.atagheating.co.uk

This renewed publication cancels all previous installation instructions. The company reserves the right to change the specifications and dimensions without prior notice.