Western Australia
Infinite Energy Solar Car Challenge

SOLAR CAR CHALLENGE

Challenging the minds of tomorrow, today.

2020 Rules and Regulations

Version 0.1

The Infinite Energy Solar Car Challenge aims to get high school-aged students across Western Australia excited about Science, Technology, Engineering and Mathematics (STEM) through problem-based learning. Students will gain hands on experience and expertise in utilising solar and renewable energy technologies; and as citizens, scientists and engineers of the future, encourage others to take on more environmentally-friendly approaches to the way we use energy.

Proudly Supported and Sponsored by:

Infinite energy

THE UNIVERSITY OF WESTERN AUSTRALIA

AUSTRALIAN INSTITUTE OF ENERGY PERTH

Administration of the Event

Overview
Students are challenged to design, build and race their very own solar-powered cars. Guided by teachers and university student mentors, students will learn and incorporate science and engineering principles into their design. Testing their ingenuity, students will participate in a two-day event to determine the fastest car on the "Infinite Track"- a 90 metre, two-lane figure 8 circuit.

Spirit of the Event
Students will work cooperatively in teams, applying new skills and knowledge in building and racing a solar-powered car. This opportunity is available to all high school students and in the interest of a fair and genuine learning experience, teams must strictly follow the Infinite Energy Solar Car Challenge rules and regulations as outlined in this document. The competition is about utilising everyday resources and encouraging innovation without a large financial cost.

Interpretation of the Rules and Regulations
The rules and regulations have been simplified for the Infinite Energy Solar Car Challenge to encourage wider participation across all Western Australian high schools. In the case of conflicts, the Australia - International Model Solar Challenge Regulations will be used as guidance. However, the event organisers have the right to make decisions for any situation that arises not covered by these rules.

Entries
The event is open to all Western Australian high-school-aged students. Schools may enter up to four cars in the Infinite Energy Solar Car Challenge in October; providing the car designs are different and original from one another. Teams must design, build and race their own car; no commercially built cars will be accepted. This only refers to the structural frame and body, not to the drive train components such as gears, shafts, bearings, wheels, tyres, or to suspension and steering components.

Registrations
Schools/teams must register their expression of interest and participation online to receive up to four free solar model car kits. There are 100 free kits available to new school entering for the first time and they will be allocated on first come, first served basis. A month before the competition, teams will be provided with event information and will be required to confirm their entries.

Timeline

Date	Event Description
February	Initial Expressions of Interest and Registration Open
March	New schools will start to receive their Solar Model Car Kits
March –July	Workshops available at UWA
May - October	Students design and build their Solar Model Car with support from University Student Mentor Program
September	Final Registration open for the Infinite Energy Solar Car Challenge
October	Infinite Energy Solar Car Challenge – Two-day event
November	Top four teams represent Western Australia at the Australia-International Model Solar Car Challenge (State TBC)

Contact Details
Mr Jun Hua Guo
Coordinator, Western Australia Solar Model Car Challenge
Mobile: 0423 410 681
Email: solarchallenge@uwa.edu.au

Event Details

Scrutineering

On arrival, all teams must register and have their student-designed and built cars scrutineered to ensure they meet the Rules and Regulations. Any car failing to pass scrutineering may have a 50-200g weight penalty added to "level the playing field". This will be at the discretion of the head scrutineer. Once teams have had their cars scrutineered, they are able to test and race their cars.

Infinite Track

A 90 metre "figure 8" track with a low bridge at the crossover point will be used. The corners will feature curves with an approximate 5-metre radius. The track will have a predominantly smooth surface with two parallel guide rails with dimensions 16mm wide by 16mm high. Car designs must allow for minor misalignment of joints.

Racing

A number of Round Robin races will be held on the first day to determine the top 32 cars. These cars will then participate in elimination races the following day, until the fastest cars are determined. Before each race, teams will collect provided solar panels to install on their cars. Teams will then line their cars up at the start gate before being counted down: "Ready, Set, Go". The winning car will be the first car to cross the finish line, or to go the furthest in the case where both cars do not complete the lap, or if the other team's car comes off the track.

Practice and testing will be permitted when the track is not occupied for official use. Teams may also make modifications/ adjustments to their car when they are not called for racing. Where a car is significantly damaged, additional time may be provided to repair their car.

Video Presentation

A key aspect of any innovative engineering endeavour is being able to effectively communicate the process. Upon registration, teams must also submit a video presentation documenting:

- The Team – Introductions and roles, team slogan, and something unique about the car
- Renewable Energy - How does it work, What is the impact on the automotive industry
- Design Phase - How the car was designed and what was the design process
- Build Phase – How did you bring your car to life and describe the materials or techniques
- Testing – How did you test your car, include footage and tell us what you have learnt

Video Marking Criteria

Item	Points
Team Collaboration	6
Design and Engineering	8
Knowledge and Understanding	8
Video Presentation	8

Awards

Awards will be presented to cars that finish First, Second, Third and Fourth, all of which will be invited to participate in the Australia-International Model Solar Challenge. Limited financial sponsorship will be made available to assist teams with flights and accommodation. Additional prizes for the Best-Engineered Car, Best 3D-Printed Design, Best Eco-friendly Car, Best Video, Greatest Team Effort, Most Spectacular Crash etc. may be awarded. All participants will receive a certificate of participation.

Car Specifications

Size Limit: Maximum car size allowed is 500mm long, 150mm high and 320mm wide. At no time may any part of the car extend sideways more than 190mm from the centre of the guide rail.

Motors: Cars must be driven by a Scorpio Technology motor - SM403. The motor can be purchased from www.scorpiotechnology.com.au for $7.88 each.

Wheels: To reduce damage to the track, knife-edge wheels are not allowed. Each wheel must be at least 1mm wide or have a radius of 0.6mm on the running surface.

Steering (Appendix A): Each car must incorporate a means of steering around the track. The guide rails are approximately 16mm wide and 16mm high. The steering mechanism must be designed to operate on the outside of the guide rail.

Driver (Appendix B): Each car must have space for a driver to navigate the track. To see where they are going, the driver must have 180° vision in the horizontal plane and 90° upwards forward of the vertical plane as shown. These occupants will be a regular ~50g eggs provided by the organisers.

Cross-Sectional Area (Appendix C): Cars will be required to demonstrate that they have a 150sq cm cross-sectional area (plane), transverse to the direction of travel. Teams will need to supply a diagram at scrutineering showing a calculation of this area.

Side Panels: All cars must have two rigid side panels, one on each side for the car's name, visible to spectators and with an additional 100mm long × 50mm high space for the event sponsored sticker.

No energy storage systems: No energy storage system, whether electrical, mechanical or chemical, which assists in the performance of the car, will be permitted.

Electronics: Electronics of any kind are allowed but will need to be documented at registration on the day. Any capacitors on the electronic circuit will be fully discharged before the start of the race.

ON-OFF switch and Wiring: Each car must be fitted with a commercial 'ON/OFF' switch with all wiring and electronics visible when scrutineered. Cars must be able to connect to 4mm banana sockets on the panel.

Solar array (Appendix C): All races and time trials will be conducted with the PV array provided by the organisers. Cars must be able to detach/attach and connect to the PV panel quickly. Arrays provided by the organisers will have a power output of 5.5 watts + or – 0.1 watts.

Typical electrical output of the provided array at AM 1.5, 25 Deg. C when connected in series is:

Volts open circuit	8.64V
Volts at maximum power	6.88V
Current at maximum power (amps)	0.808A
Current at short circuit	0.9A
Maximum power (watts)	5.56W

Appendix A – Track and Steering

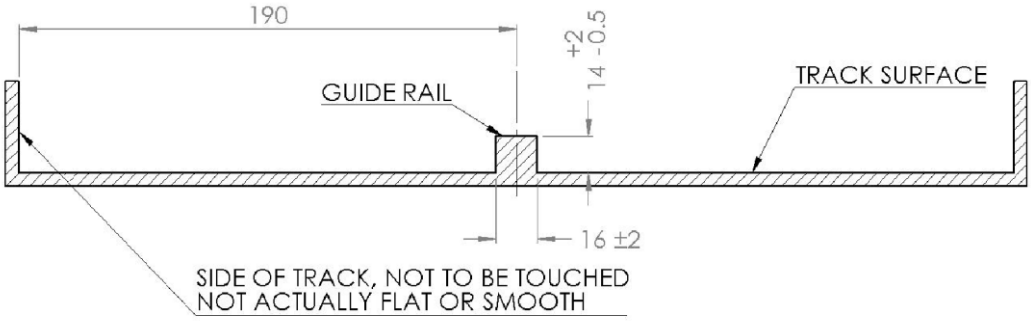

Note: The Western Australian track does not have sides on it.

Appendix B – Driver

In the case of adverse weather, the driver - a ~50g egg - would prefer to remain dry, so the cabin must be totally sealed from the elements to prevent water getting inside – or broken egg on the track! The cabin must not be closer than 10mm to any part of the driver, so they have room to move and climb in and out of the seats.

During the race, if the driver or passenger suffers an injury (any damage at all) that team will lose the race. Eggs will be checked after each race. It will be the team's responsibility to provide medical attention to the eggs (clean up the mess!).

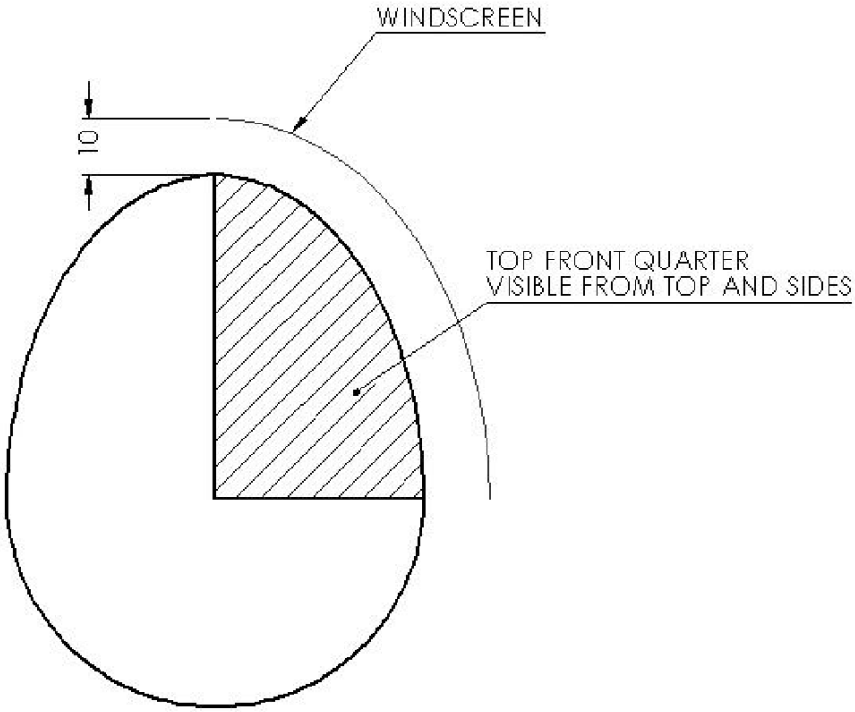

Appendix C – Cross-Sectional Area (150sq cm)

Cars will be required to demonstrate that they have a 150sq cm cross-sectional area (illustrated in yellow), transverse to the direction of travel. The cross-sectional area can be simply calculated by multiplying the length and width. The area may be any shape and can include axles and panel supports, if they happen to be in the same plane, but no running gear like wheels, motors, guide rollers, electronic devices or the solar array. Teams will need to supply a diagram at scrutineering showing a calculation of this area.

Appendix D – Solar Array

Dimensions: Overall dimensions, length 276 to 280 mm not including the terminals, width 165 to 170 mm, maximum height of sides 20 mm at terminal end, other sides 12 mm. Weight 240 plus or minus 15 grams.

Terminals: Kits include one solder 'mini dean,' which connects to the solar panel configured in series. However, teams may use banana plugs to connect to the Jaycar sockets mounted on one end (catalogue PS-0406 (red) PS-0408 (black)). Banana sockets are spaced at a nominal 20 mm (+ or – 2mm) apart.

Mounting: Velcro loop tape 25 mm wide is available all around the outer edge on the back.